Addendum 05

Corporate Headquarters
7535 N. Palm Ave. #201
Fresno, CA 93711

559.437.0887 T
559.438.7554 F
teterae.com

Date: April 22, 2025

STOCKTON UNIFIED SCHOOL DISTRICT

Expanded Learning Opportunities Program (ELOP) - Relocatable Classroom Buildings

PROJECT SITES AND ABBREVIATIONS

Peyton Elementary School	PEY	Taylor Leadership Academy	TAY
Pulliam Elementary School	PUL	Wilson Elementary School	WIL
Roosevelt Elementary School	ROO	Hamilton Elementary School	HAM
Rio Calaveras Elementary School	RIO		

CLIENT: Vickie Brum
DSA File No.: 36-69

CLIENT ADDRESS: 56 South Lincoln St., Stockton, CA

The following additions, deletions and revisions to the plans, specifications and Addenda shall become a part of the plans and specifications. It is the responsibility of the General Contractor to submit the information contained in this addendum to all subcontractors and suppliers. The Bidder shall acknowledge receipt of the Addendum in the Bid Proposal. (Addendum number of pages: **06** pages + **07** attachments = **13** total pages).

GENERAL:

5 - 01: INTRUSION ALARM AT ALL CAMPUSES

A. Intrusion devices are rough-in only and installation of wiring and devices is not provided per this contract.

5 - 02: INTERCOM AT ALL CAMPUSES

A. Intercom devices are rough-in only and installation of wiring and devices is not provided per this contract unless otherwise noted where a type 'D' cable will be installed for the District to use in the future.

TAYLOR LEADERSHIP ACADEMY

TETER PROJECT NO.: 23-12900	**ADDRESS:** 1101 LEVER BOULEVARD, Stockton, CA 95206
DSA APPL. NO.: 02-122755	**CLIENT PROJECT NO.:** 24.066

DRAWINGS:

5 - 03: **DRAWINGS, SHEET E710 – "FIRE ALARM RISER DIAGRAM & CALCULATIONS",** revise as follows:

A. Replace sheet for sheet within the bid documents with the attached sheet in its entirety. Please note changes as clouded.

1. Revised fire alarm control panel and components to replace obsolete Edwards EST 3 with updated Edwards EST 4 Emergency Communications Platform. See attached, **AD5-TAY-E01**.

PULLIAM ELEMENTARY SCHOOL

TETER PROJECT NO.: 23-12901	**ADDRESS:** 230 Presidio Way, Stockton, CA 95207
DSA APPL. NO.: 02-122764	**CLIENT PROJECT NO.:** 24.066

DRAWINGS:

5 - 04: **DRAWINGS, SHEET E710 – "FIRE ALARM RISER DIAGRAM & CALCULATIONS",** revise as follows:

A. Replace sheet for sheet within the bid documents with the attached sheet in its entirety. Please note changes as clouded.

1. Revised fire alarm control panel and components to replace obsolete Edwards EST 3 with updated Edwards EST 4 Emergency Communications Platform. See attached, **AD5-PULL-E02**.

ROOSEVELT ELEMENTARY SCHOOL

TETER PROJECT NO.: 23-12907	**ADDRESS:** 776 S. BROADWAY AVE, STOCKTON, CA 95206
DSA APPL. NO.: 02-122792	**CLIENT PROJECT NO.:** 24.066

DRAWINGS:

5 - 05: **DRAWINGS, SHEET E710 – "FIRE ALARM RISER DIAGRAM & CALCULATIONS",** revise as follows:

A. Replace sheet for sheet within the bid documents with the attached sheet in its entirety. Please note changes as clouded.

1. Revised fire alarm control panel and components to replace obsolete Edwards EST 3 with updated Edwards EST 4 Emergency Communications Platform. See attached, **AD5-ROO-E03.**

5 - 06: **DRAWINGS, SHEET E800 – "ELECTRICAL SCHEDULES, LEGENDS AND NOTES",** revise as follows:

A. Fire Alarm Cable Schedule

1. 'FNET' cable type added for connection of two fire alarm control panels and the annunciator panel. See attached, **AD5-ROO-E04**.

RIO CALAVERAS ELEMENTARY SCHOOL

TETER PROJECT NO.: 23-12909	**ADDRESS:** 1819 E. BIANCHI RD STOCKTON, CA 95210
DSA APPL. NO.: 02-122779	**CLIENT PROJECT NO.:** 24.066

DRAWINGS:

5 - 07: **DRAWINGS, SHEET E710 – "FIRE ALARM RISER DIAGRAM & CALCULATIONS"**, revise as follows:

A. Replace sheet for sheet within the bid documents with the attached sheet in its entirety. Please note changes as clouded.

1. Revised fire alarm control panel and components to replace obsolete Edwards EST 3 with updated Edwards EST 4 Emergency Communications Platform. See attached, **AD5-RIO-E05.**

HAMILTON ELEMENTARY SCHOOL

TETER PROJECT NO.: 23-13018	**ADDRESS:** 2245 E. 11TH ST., STOCKTON, CA 95206
DSA APPL. NO.: 02-122812	**CLIENT PROJECT NO.:** 24.066

DRAWINGS:

5 - 08: **DRAWINGS, SHEET E710 – "FIRE ALARM RISER DIAGRAM & CALCULATIONS",** revise as follows:

A. Replace sheet for sheet within the bid documents with the attached sheet in its entirety. Please note changes as clouded.

1. Revised fire alarm control panel and components to replace obsolete Edwards EST 3 with updated Edwards EST 4 Emergency Communications Platform. See attached, **AD5-HAM-E06**.

5 - 09: **DRAWINGS, SHEET E800 – "ELECTRICAL LEGEND, NOTES, & SCHEDULES",** revise as follows:

A. Fire Alarm Cable Schedule

1. 'FNET' cable type added for connection of fire alarm control panel and the annunciator panel. See attached, **AD5-HAM-E07**.

END OF ADDENDUM NO. 05

JAMES E. HICKMAN, JR.
Architect of Record

FIRE ALARM SYSTEM DESCRIPTION

THE FIRE ALARM SYSTEM DESCRIBED BY THESE DRAWINGS AND ASSOCIATED SPECIFICATIONS IS A MANUAL AND AUTOMATIC SYSTEM. THIS SYSTEM UTILIZES SMOKE DETECTORS ON CEILINGS AND IN THE ROOMS HOUSING THE FIRE ALARM SYSTEM EQUIPMENT, WITH HEAT DETECTORS INSTALLED IN ATTICS. THE SYSTEM IS ADDRESSABLE AND IS WIRED CLASS 'B' WITHIN THE BUILDINGS AND CLASS 'B' BETWEEN BUILDINGS.

FIRE ALARM APPROVAL

THE FIRE ALARM SYSTEM DESIGN IS A "COMPLETE PLAN SUBMITTAL" PER DSA FIRE ALARM SUBMITTAL GUIDELINES. THE CONTRACTOR SHALL INSTALL THE SYSTEM AS SHOWN AND AS HEREIN SPECIFIED. IF ANY SUBSTITUTION OF FIRE ALARM EQUIPMENT IS TO BE REQUESTED, SUCH REQUEST SHALL BE MADE A MINIMUM OF TWO WEEKS PRIOR TO PROJECT BID DATE. THE CONTRACTOR SHALL BE RESPONSIBLE FOR SUBMITTING THE SUBSTITUTION PER THE DSA GUIDELINES AND SHALL PAY ALL ADDITIONAL COSTS REQUIRED TO ACCOMMODATE REVIEW OF THE SUBSTITUTED FIRE ALARM SYSTEM BY DSA, WHETHER OR NOT SUCH APPROVAL IS GIVEN. THE CONTRACTOR'S SUBMITTAL SHALL INCLUDE MANUFACTURER'S CATALOG CUT SHEETS AND CSFM LISTING SHEETS FOR THE INDIVIDUAL COMPONENTS COMPRISING THE SUBSTITUTED FIRE ALARM SYSTEM, BATTERY LOAD CALCULATIONS AND VOLTAGE DROP CALCULATIONS FOR EACH SIGNALING CIRCUIT.

APPLICABLE CODES AND STANDARDS

2022 CA BUILDING CODE - CCR, TITLE 24, PART 2, VOLUMES 1 & 2
(2021 IBC AND CALIFORNIA AMENDMENTS)
2022 CA ELECTRICAL CODE - CCR, TITLE 24, PART 3
(2020 NEC AND CALIFORNIA AMENDMENTS)
2022 CA MECHANICAL CODE - CCR, TITLE 24, PART 4
(2021 UMC AND CALIFORNIA AMENDMENTS)
2022 CA PLUMBING CODE - CCR, TITLE 24, PART 5
(2021 UPC AND CALIFORNIA AMENDMENTS)
2022 CA FIRE CODE - CCR, TITLE 24, PART 9
(2021 IFC AND CALIFORNIA AMENDMENTS)
2022 CA REFERENCE STANDARDS CODE - CCR, TITLE 24, PART 12
2022 NFPA 13, INSTALLATION OF SPRINKLER SYSTEMS AND 2022 CALIFORNIA AMENDMENTS
2022 NFPA 72, NATIONAL FIRE ALARM CODE, AND 2022 CALIFORNIA AMENDMENTS
PUBLIC SAFETY, STATE FIRE MARSHAL REGULATIONS - CCR, TITLE 19
DSA GUIDELINES FOR FIRE AND LIFE SAFETY SYSTEMS, DIVISION OF THE STATE ARCHITECT OFFICE OF REGULATION SERVICES.

FIRE ALARM GENERAL NOTES

1. UNDERGROUND AND EXTERIOR CONDUITS WILL HAVE WATERTIGHT FITTINGS. (CEC 110.11 AND CEC 300.6)
2. OUTLETS ON OPPOSITE SIDES OF A FIRE RATED WALL SHALL BE INSTALLED WITH A MINIMUM HORIZONTAL SPACING OF TWO FEET.
3. FIRE ALARM DEVICE MOUNTING HEIGHTS SHALL BE AS FOLLOWS:
   a. PULL STATION - OPERABLE PART OF A MANUALLY ACTUATED ALARM INITIATING DEVICE SHALL BE NOT LESS THAN 42" FROM FINISHED FLOOR; AND TOP OF BOX SHALL NOT BE MORE THAN 48" FROM FINISHED FLOOR. (CBC 11B 308.1.1, NFPA 72 17.14.5)
   b. INTERIOR AUDIBLE NOTIFICATION APPLIANCE - AT LEAST 90" TO THE TOP OF DEVICE ABOVE FINISHED FLOOR AND NOT LESS THAN 6" BELOW FINISHED CEILING. (NFPA 72 18.4.8.1)
   c. WALL-MOUNTED STROBE OR SPEAKER/STROBE - AT LEAST 80" TO BOTTOM OF LENS AND NOT GREATER THAN 96" TO TOP OF LENS ABOVE FINISHED FLOOR. (NFPA 72 18.5.5.1)
4. AUDIBLE SIGNAL DEVICES OF A FIRE ALARM SYSTEM INTENDED TO ALERT ALL OCCUPANTS SHALL BE SO LOCATED AND UNOBSTRUCTED AS TO CAUSE A LEVEL OF AUDIBILITY OF AT LEAST 15 dBA ABOVE AVERAGE AMBIENT SOUND LEVEL BUT NOT LESS THAN 75 dBA AT TEN FEET, OR MORE THAN 110 dBA IN TOTAL. (NFPA 72 18.4.3.1, 18.4.1.2 AND CFC 907.5.2.1.2)
5. AMBIENT NOISE LEVELS SHALL BE CONSTRUED TO MEAN THAT WHICH CAN NORMALLY BE EXPECTED TO EXIST WHEN THE FACILITY, BUILDING, ROOM OR AREA IS FUNCTIONING UNDER NORMAL OPERATIVE OR WORKING CONDITIONS. (CFC 907.5.2.1.1)
6. AUDIBLE DEVICES SHALL SOUND THE CA UNIFORM FIRE ALARM SIGNAL IN TEMPORAL MODE. PROVIDE AT LEAST ONE EXTERIOR AUDIBLE DEVICE ON BUILDING FOR E OCCUPANCIES. (CFC 907.5.2.1.3)
7. EMERGENCY VOICE/ALARM COMMUNICATION SYSTEM SHALL COMPLY WITH CBC 907.2.3 AND NFPA 72 24.4.2
8. VISUAL DEVICES SHALL NOT EXCEED TWO FLASHES PER SECOND AND SHALL NOT BE SLOWER THAN ONE FLASH EVERY SECOND. (NFPA 72 18.5.3.1)
9. AUTOMATIC SMOKE DETECTION SHALL BE PROVIDED AT THE LOCATION OF EACH FIRE ALARM CONTROL UNIT, NOTIFICATION APPLIANCE CIRCUIT POWER EXTENDER AND SUPERVISING STATION TRANSMITTING EQUIPMENT TO PROVIDE NOTIFICATION OF FIRE AT THAT LOCATION. (NFPA 72 10.4.4)
10. BRANCH CIRCUITS PROTECTING FIRE ALARM EQUIPMENT SHALL BE LABELED PER NFPA 72 10.6.5.2.2 AND SHALL INCLUDE A LISTED CIRCUIT BREAKER LOCKING DEVICE PER NFPA 72 10.6.5.4
11. COMPLETE THE NFPA 72 RECORD OF COMPLETION, TESTING ALL DEVICES AND APPLIANCES. PROVIDE A COPY OF THE COMPLETED RECORD OF COMPLETION TO THE OWNER (SCHOOL DISTRICT), ARCHITECT, LOCAL FIRE AUTHORITY, AND DSA VIA THE PROJECT INSPECTOR. TESTING OF THE ENTIRE SYSTEM SHALL BE MADE IN THE PRESENCE OF THE LOCAL FIRE AUTHORITY AND THE DSA INSPECTOR OF RECORD (IOR). FINAL TEST SHALL INCLUDE READ OUT VERIFICATION FORM FROM CENTER STATION.
12. THE AUTOMATIC ALARM SYSTEM SHALL BE INSTALLED, TESTED, AND MAINTAINED IN ACCORDANCE WITH THE STATE FIRE MARSHAL'S REGULATIONS (CFC 907.8.5, NFPA 72 14.4.1.1, NFPA 72 14.5)

FIRE ALARM CODES AND NOTES N.T.S. 19

FIRE ALARM SYSTEM EQUIPMENT LEGEND

SYMBOL	DESCRIPTION
FACP	FIRE ALARM CONTROL PANEL 'FACP' EDWARDS EST4 SERIES W/AUTOMATIC CHARGING SYSTEM BACKBOX: EDWARDS #3-CAB14B & DOOR: EDWARDS #4-CAB24DR (DIMENSIONS: 37.75"H x 24.12"W x 3.86"D): PROCESSOR: EDWARDS #4-CPU LCD: EDWARDS #4-LCDAUDTEL AUDIO SOURCE UNIT: EDWARDS #4-AUDTELS 20W ZONE AMPLIFIER: EDWARDS #3-ZA20A NETWORK: 4-NET-AD WITH 4-NET-CAT DACT: EDWARDS #3-MODCOMP I/O: EDWARDS #3-IDC8/4 POWER SUPPLY: EDWARDS #4-PPS/M C.S.F.M. #7165-1657:0186
4-ANN M	FIRE ALARM REMOTE ANNUNCIATOR EDWARDS EST4 SERIES BACKBOX: EDWARDS #4-4ANNMT (DIMENSIONS: 13.72"H x 12.73"W x 2.2"D): PROCESSOR: EDWARDS #4-ANNCPU AUDIO SOURCE EXPANDER: EDWARDS #4-ANNAUDTEL LCD: EDWARDS #4-LCDANN NETWORK: 4-NET-AD WITH 4-NET-CAT C.S.F.M. #7165-1657:0186
(N) APS	NEW FIRE ALARM AUXILIARY POWER SUPPLY 'APS' WITH AUTOMATIC CHARGING SYSTEM, AND INTEGRAL AUDIO AMPLIFIER : EDWARDS #APS-10A, C.S.F.M. #7300-1657:0229 EDWARDS #SIGA-AA50, C.S.F.M. #7300-1657:0121
CS	NEW ADDRESSABLE SYNCRONIZATION OUTPUT MODULE : EDWARDS #SIGA-CC1S, C.S.F.M.#7300-1657:0121 (MOUNT INSIDE NEW FIRE ALARM AUXILIARY POWER SUPPLY 'APS')
SD	NEW ADDRESSABLE SMOKE DETECTOR AND BASE (ON CEILING): EDWARDS #SIGA-OSD; C.S.F.M. #7272-1657:0511 EDWARDS #SIGA-SB; C.S.F.M. #7300-1657:0120
HD	NEW ADDRESSABLE HEAT DETECTOR AND BASE (ON CEILING): EDWARDS #SIGA-HRD; C.S.F.M. #7270-1657:0333 EDWARDS #SIGA-SB; C.S.F.M. #7300-1657:0120
A HD	NEW ADDRESSABLE HEAT DETECTOR AND BASE (IN ATTIC): EDWARDS #SIGA-HRD; C.S.F.M. #7270-1657:0333 EDWARDS #SIGA-SB; C.S.F.M. #7300-1657:0120
SV XX	NEW SPEAKER/STROBE ANNUNCIATOR - WALL MOUNTED (XX REPRESENTS CANDELA) EDWARDS #G4SVRF; C.S.F.M. #7320-1657:0516
S WP	NEW VOICE EVACUATION SYSTEM SPEAKER (OUTDOOR - WEATHERPROOF) EDWARDS #WG4RF-S, WG4RTS C.S.F.M. #7320-1657:0289

REFER TO FIRE ALARM CABLE SCHEDULE ON SHEET E800 FOR FIRE ALARM CABLE MANUFACTURER, PART NUMBERS, AND C.S.F.M. LISTING NUMBERS

FIRE ALARM LEGEND N.T.S. 13

SB575 - GREEN OAKS FAMILY ACADEMY ELEMENTARY SCHOOL FIRE PROTECTION ACT REQUIREMENTS FOR AUTOMATIC FIRE ALARM SYSTEMS

THE FIRE DETECTION AND ALARM SYSTEM FOR THE AREAS AND/OR BUILDINGS WITHIN THE SCOPE OF WORK OF THIS PROJECT:

- [X] COMPLIES WITH SB575
  - [X] A FULLY-AUTOMATIC SYSTEM HAS BEEN DESIGNED FOR ALL AREAS, OR
  - [ ] THE AREAS AND/OR BUILDINGS ARE SPRINKLERED WHICH ARE CEILING, SO HEAT DETECTORS ARE EXEMPTED FROM ABOVE-CEILING AREAS. THE SYSTEM IS OTHERWISE FULLY AUTOMATIC.
  - [X] AN AUTOMATIC DIALER TO A UL-APPROVED CENTRAL STATION:
    - [X] IS EXISTING, OR
    - [ ] IS INCLUDED AS PART OF THIS PROJECT.
- [ ] IS EXEMPT FROM SB575
  - [ ] THE TOTAL PROJECT CONSTRUCTION VALUE IS LESS THAN $200,000, OR
  - [ ] THE PROJECT CONSISTS OF ONLY MODULAR BUILDINGS WHICH ARE TEMPORARY; THESE BUILDINGS SHALL BE REMOVED NO MORE THAN THREE YEARS FROM THE INSTALLATION DATE UNLESS A THREE-YEAR EXTENSION IS APPROVED BY DSA, OR
  - [ ] THE PROJECT IS NOT FUNDED UNDER CHAPTER 12.5 OF THE LEROY F. GREENE SCHOOL FACILITIES ACT. IT WILL BE 100% FUNDED BY LOCAL FUNDS.

SB575 N.T.S. 14

FIRE ALARM MONITORING NOTE

AUTOMATIC FIRE ALARM SYSTEMS SHALL TRANSMIT THE ALARM, SUPERVISORY AND TROUBLE SIGNALS TO AN APPROVED SUPERVISING STATION AS REQUIRED BY NFPA 72 AS AMENDED BY CFC CHAPTER 80. THE SUPERVISING STATION SHALL BE LISTED AS EITHER UUFX OR UUJS BY UNDERWRITERS LABORATORY OR SHALL MEET THE REQUIREMENTS OF FACTORY MUTUAL RESEARCH APPROVAL STANDARD 3011. SUPERVISION OF SYSTEM AND LEASED TELEPHONE LINES SHALL BE ARRANGED BY OWNER.

FIRE ALARM MONITORING NOTE N.T.S. 15

FIRE ALARM SYSTEM OPERATIONAL MATRIX

DEVICE	ACTIVATE EVACUATION SIGNALS/STROBES	SHUTDOWN FIRE/SMOKE DAMPER, OR ACTIVATE SMOKE VENT RELEASE	SHUTDOWN HVAC EQUIPMENT	ANNUNCIATE AT BUILDING FACP AND ALL REMOTE ANNUNCIATORS	SEND SIGNAL TO CENTRAL STATION
FIRE ALARM PANEL SYSTEM TROUBLE				X	X
SMOKE DETECTOR	X	X		X	X
HEAT DETECTOR	X			X	X

FIRE ALARM OPERATIONAL MATRIX 16

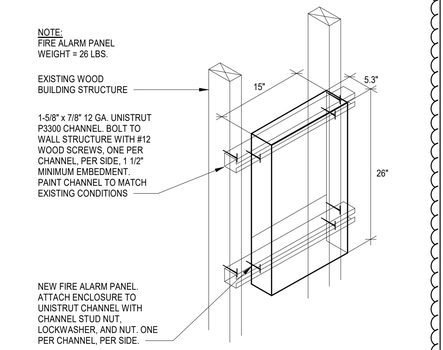

FIRE ALARM PANEL MOUNTING N.T.S. 9

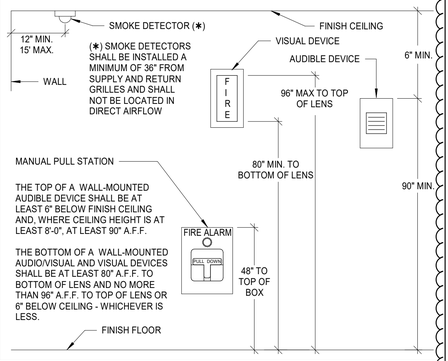

FIRE ALARM DEVICE ELEVATIONS N.T.S. 10

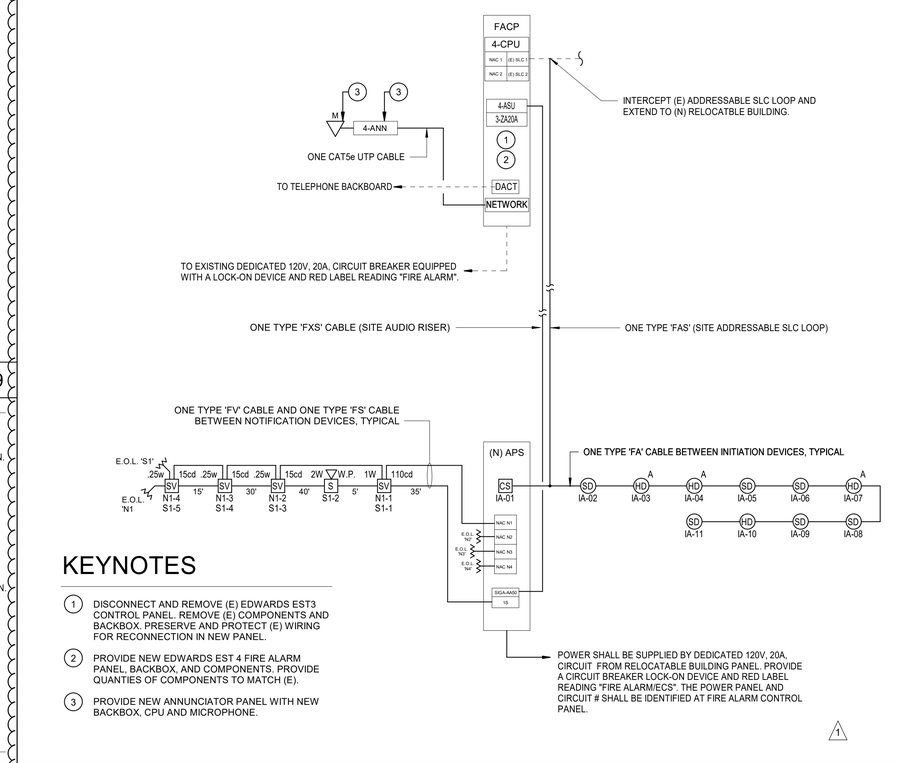

KEYNOTES

1. DISCONNECT AND REMOVE (E) EDWARDS EST3 CONTROL PANEL. REMOVE (E) COMPONENTS AND BACKBOX. PRESERVE AND PROTECT (E) WIRING FOR RECONNECTION IN NEW PANEL.
2. PROVIDE NEW EDWARDS EST 4 FIRE ALARM PANEL, BACKBOX, AND COMPONENTS. PROVIDE QUANTIES OF COMPONENTS TO MATCH (E).
3. PROVIDE NEW ANNUNCIATOR PANEL WITH NEW BACKBOX, CPU AND MICROPHONE.

FIRE ALARM RISER DIAGRAM N.T.S. 2

NEW FIRE ALARM CONTROL PANEL 'FACP' BATTERY CALCULATIONS

QTY.	DEVICE	DESCRIPTION	STANDBY CURRENT	ALARM CURRENT/ DEVICE	ALARM CURRENT
1	Edwards EST4	Fire Alarm Control Panel	------*	------*	------*
1	Edwards 4-PPSM	Power Supply	------*	------*	------*
1	4-CPU	Central Processor	0.23000	0.23000	0.23000
1	4-NET-AD	Network adder module	0.09200	0.09200	0.09200
1	4-LCD	LCD Module	0.05000	0.11000	0.11000
1	3-SSDC1	Dual SIGA Controller	0.26400	0.33600	0.33600
1	3-IDC8/4	Hardwired Module	0.04800	0.40800	0.40800
1	3-MODCOM	Dact Module	0.06000	0.09500	0.09500
1	4-AUDTELS	Audio Source Unit	0.08500	0.10100	0.10100
1	3-ZA20X	20W Zone Amplifier	0.06200	1.12000	1.12000
1	ANNUNCIATOR	Fire Alarm Remote Annunciator	0.12500	0.12500	0.12500
85	Edwards SIGA-PHS	Smoke Detectors	0.00383**	0.00005**	0.00383**
23	Edwards SIGA-HRS	Heat Detectors	0.00104**	0.00005**	0.00104**
56	Edwards SIGA-278	Pull Stations	0.01400**	0.00040**	0.02240**
4	Edwards SIGA-MM1	Monitor Module	0.00100**	0.00040**	0.00160**
1	Edwards SIGA-CR	Control Relay Module	0.00010**	0.00010**	0.00010**
6	SIGA-OSD/SIGA-SB	Smoke Detector and Base	0.00192**	0.00032**	0.00192**
4	SIGA-HRD/SIGA-SB	Heat Detector and Base	0.00128**	0.00032**	0.00128**
3	Edwards 405-3A	Strobes (30cd)	-------	0.12500	0.37500
2	Edwards 757-3A-T	Horn/Strobes (30cd)	-------	0.16500	0.33000
1	Edwards 757-1A-T	Interior Horns	-------	0.04000	0.04000
4	Edwards 757-1A-T	Exterior Horns	-------	0.04000	0.16000
		TOTALS	1.0160		3.5220

TOTAL ALARM AMP-HOURS (15 MIN.) =	0.25	HR	x	3.522	A	=	0.8805 A-H
TOTAL STANDBY AMP-HOURS (24 HRS) =	24	HR	x	1.016	A	=	24.3840 A-H
TOTAL REQUIRED AMP-HOURS =						=	25.2645 A-H
TOTAL DESIGN AMP-HOURS WITH 25% SAFETY FACTOR =						=	31.5806 A-H
BATTERIES							40.000 A-H

FIRE ALARM CONTROL PANEL 'FACP' NOTES:

* FIRE ALARM CONTROL PANEL STANDBY AND ALARM CURRENT IS A CUMLATIVE TOTAL OF ALL INTERNAL COMPONENTS LISTED BELOW. THE POWER SUPPLY IS CONNECTED TO A DEDICATED 120V CIRCUIT. THERE IS NO STANDBY OR ALARM CURRENT DRAW ON THE SYSTEM BATTERIES.

** STANDBY AND ALARM CURRENT FOR ALL INITIATION DEVICES ARE INCLUDED IN THE STANDBY AND ALARM CURRENT FOR THE DUAL SIGA CONTROLLER.

NEW FIRE ALARM AUXILIARY POWER SUPPLY 'APS' BATTERY CALCULATION

QTY.	DEVICE	DESCRIPTION	STANDBY CURRENT	ALARM CURRENT/D EVICE	ALARM CURRENT
1	APS-F	(N) Fire Alarm Auxiliary Power Supply, Edwards #APS10A	0.1050	0.2700	0.2700
1	SIGA-AA50	(N) Fire Alarm Amplifier, Edwards #SIGA-AA50 (2)	0.0020	2.8000*	2.8000*
		STROBE CURRENT (NAC N1)			
3	SV15	Multi-Candela Speaker Strobe (15cd) Edwards #G4SVRF	-------	0.0280	0.0840
1	SV110	Multi-Candela Speaker Strobe (110cd) #G4SVRF	-------	0.0280	0.0280
		SPEAKER CURRENT (CKT S1)			
3	SP-1/4W	Multi-Candela Speaker Strobe (.25w) Edwards #G4SVRF	-------	-------	------- **
1	SP-1W	Multi-Candela Speaker Strobe (1w) Edwards #G4SVRF	-------	-------	------- **
1	SP-2W	Exterior Weatherproof Speaker (2W) Edwards #G4SVRF	-------	-------	------- **
		TOTALS	0.1070	0.3260	0.3820

TOTAL ALARM AMP-HOURS (15 MIN.) =	0.25	HR	x	0.382	A	=	0.0955 A-H
TOTAL STANDBY AMP-HOURS (24 HRS) =	24	HR	x	0.107	A	=	2.5680 A-H
TOTAL REQUIRED AMP-HOURS =						=	**2.6635 A-H**
TOTAL DESIGN AMP-HOURS WITH 25% SAFETY FACTOR =						=	**3.3294 A-H**
BATTERIES							**7.000 A-H**

NEW FIRE ALARM AUXILIARY POWER SUPPLY 'APS' NOTES:

* THE SIGA AA50 AMPLIFIER IS CALCUALTED WITH THE MAXIMUM AUDIO DEVICE LOAD (CAPACITY FOR ALL SPEAKERS).

** SPEAKER ALARM CURRENT IS INCLUDED IN THE MAXIMUM OUTPUT OF THE SIGA-AA50 AMPLIFIER.

dB LINE LOSS CALCULATION

SPEAKER VOLTAGE = 70

SPEAKERS	DEVICE POWER (WATTS)	SIGNAL CKT S1 QTY.	SIGNAL CKT S1 WATTS	SIGNAL CKT QTY.	SIGNAL CKT WATTS	SPEAKER QTY TOTAL.	MIN. AMP SIZE (WATTS)
SPEAKER - 1/4 WATT TAP	0.25	3	0.75	0	0	3	4.5
SPEAKER - 1 WATT TAP	1	1	1	0	0	1	
SPEAKER - 2 WATT TAP	1	1	2	0	0	1	
TOTAL POWER ON CKT (P) WATTS		3.75		0			
LOAD RESISTANCE (LR) OHMS		1307		-			
TOTAL WIRE LENGTH (D) FT		125		0			
WIRE SIZE		14 AWG		14 AWG			
TOTAL WIRE RESISTANCE (WR) OHMS		0.815		-			
POWER LOSS (PL) dB		**-0.01**		**-**			

FORMULAS

WIRE RESISTANCE (R) (OHMS/Kft)*

18 AWG	=	8.08
16 AWG	=	5.08
14 AWG	=	3.26
12 AWG	=	2.05

*VALUES PER NFPA 70

TOTAL WIRE RESISTANCE (WR) = (R / 1000) * D

LOAD RESISTANCE (LR) = (SPEAKER VOLTAGE)^2 / P

POWER LINE LOSS (PL) = 10 * LOG (1- (WR / (WR+LR)))

NAC 'N1' VOLTAGE DROP CALCULATION

QTY.	DEVICE	DESCRIPTION	STANDBY CURRENT	ALARM CURRENT/D EVICE	ALARM CURRENT
3	SV15	Multi-Candela Speaker Strobe (15cd) Edwards #G4SVRF		0.0280	0.0840
1	SV110	Multi-Candela Speaker Strobe (110cd) Edwards #G4SVRF		0.0280	0.0280
		TOTAL CURRENT ADDED TO CIRCUIT		0.000	0.112

LENGTH OF WIRE FROM FACP TO LAST DEVICE (IN FEET) =	**125**
ACTUAL SIZE OF WIRE INSTALLED = **12** AWG **6530** CIRCULAR MILS	
CALCULATED VOLTAGE DROP (IN VDC) =	**0.046**
CIRCUIT VOLTAGE CALCULATED AT LAST DEVICE (IN VDC) =	**24 VDC**
PERCENT VOLTAGE DROP (%) =	**0.19 %**

VOLTAGE DROP FORMULA:

VOLTAGE DROP = 2 X 10.8 x LENGTH OF CIRCUIT TO FARTHEST DEVICE x CURRENT / WIRE SIZE IN C.M.

COMPUTED WITH TOTAL CURRENT ON CIRCUIT AT MAXIMUM LENGTH (CLASS A CIRCUIT).

BATTERY AND VOLTAGE DROP CALCULATIONS N.T.S. 4

MARK	DATE	DESCRIPTION
1	4.22.25	ADDENDUM 05 - FIRE ALARM REV
B	8/21/24	DSA SUBMITTAL

Teter, Inc. expressly reserves its common law copyright and other property rights in these plans. This document, the ideas and designs incorporated herein, as an instrument of professional service, is not to be used in whole or in part, for any other project without prior written authorization.

TETER, INC.
ARCHITECTS ENGINEERS CONNECTED
FRESNO HEADQUARTERS
VISALIA | BAKERSFIELD | MODESTO | SAN LUIS OBISPO

STOCKTON UNIFIED SCHOOL DIST.
TAYLOR LEADERSHIP ELOP
1101 LEVER BOULEVARD
STOCKTON, CA

DRAWING TITLE
FIRE ALARM RISER DIAGRAM & CALCULATIONS

PROJECT NO.
23-12900.00

DRAWING
E710

AD5-TAY-E01

\\tetr-file1\Users\jason.march\Documents\12900-E-TAYLOR LEADERSHIP ELOP_march_jason.rvt
PLOT DATE: 4/22/2025 5:33:11 PM

\\tet-file1\Users\jason.march\Documents\12901-E-PULLIAM ELEM ELOP_march_jason.rvt

FIRE ALARM SYSTEM DESCRIPTION

THE FIRE ALARM SYSTEM DESCRIBED BY THESE DRAWINGS AND ASSOCIATED SPECIFICATIONS IS A MANUAL AND AUTOMATIC SYSTEM. THIS SYSTEM UTILIZES SMOKE DETECTORS ON CEILINGS AND IN THE ROOMS HOUSING THE FIRE ALARM SYSTEM EQUIPMENT, WITH HEAT DETECTORS INSTALLED IN ATTICS. THE SYSTEM IS ADDRESSABLE AND IS WIRED CLASS 'B' WITHIN THE BUILDINGS AND CLASS 'B' BETWEEN BUILDINGS.

FIRE ALARM APPROVAL

THE FIRE ALARM SYSTEM DESIGN IS A "COMPLETE PLAN SUBMITTAL" PER DSA FIRE ALARM SUBMITTAL GUIDELINES. THE CONTRACTOR SHALL INSTALL THE SYSTEM AS SHOWN AND AS HEREIN SPECIFIED. IF ANY SUBSTITUTION OF FIRE ALARM EQUIPMENT IS TO BE REQUESTED, SUCH REQUEST SHALL BE MADE A MINIMUM OF TWO WEEKS PRIOR TO PROJECT BID DATE. THE CONTRACTOR SHALL BE RESPONSIBLE FOR SUBMITTING THE SUBSTITUTION PER THE DSA GUIDELINES AND SHALL PAY ALL ADDITIONAL COSTS REQUIRED TO ACCOMMODATE REVIEW OF THE SUBSTITUTED FIRE ALARM SYSTEM BY DSA, WHETHER OR NOT SUCH APPROVAL IS GIVEN. THE CONTRACTOR'S SUBMITTAL SHALL INCLUDE MANUFACTURER'S CATALOG CUT SHEETS AND CSFM LISTING SHEETS FOR THE INDIVIDUAL COMPONENTS COMPRISING THE SUBSTITUTED FIRE ALARM SYSTEM, BATTERY LOAD CALCULATIONS AND VOLTAGE DROP CALCULATIONS FOR EACH SIGNALING CIRCUIT.

APPLICABLE CODES AND STANDARDS

2022 CA BUILDING CODE - CCR, TITLE 24, PART 2, VOLUMES 1 & 2
(2021 IBC AND CALIFORNIA AMENDMENTS)
2022 CA ELECTRICAL CODE - CCR, TITLE 24, PART 3
(2020 NEC AND CALIFORNIA AMENDMENTS)
2022 CA MECHANICAL CODE - CCR, TITLE 24, PART 4
(2021 UMC AND CALIFORNIA AMENDMENTS)
2022 CA PLUMBING CODE - CCR, TITLE 24, PART 5
(2021 UPC AND CALIFORNIA AMENDMENTS)
2022 CA FIRE CODE - CCR, TITLE 24, PART 9
(2021 IFC AND CALIFORNIA AMENDMENTS)
2022 CA REFERENCE STANDARDS CODE - CCR, TITLE 24, PART 12
2022 NFPA 13, INSTALLATION OF SPRINKLER SYSTEMS AND 2022 CALIFORNIA AMENDMENTS
2022 NFPA 72, NATIONAL FIRE ALARM CODE, AND 2022 CALIFORNIA AMENDMENTS
PUBLIC SAFETY, STATE FIRE MARSHAL REGULATIONS - CCR, TITLE 19
DSA GUIDELINES FOR FIRE AND LIFE SAFETY SYSTEMS, DIVISION OF THE STATE ARCHITECT OFFICE OF REGULATION SERVICES.

FIRE ALARM GENERAL NOTES

1. UNDERGROUND AND EXTERIOR CONDUITS WILL HAVE WATERTIGHT FITTINGS. (CEC 110.11 AND CEC 300.6)
2. OUTLETS ON OPPOSITE SIDES OF A FIRE RATED WALL SHALL BE INSTALLED WITH A MINIMUM HORIZONTAL SPACING OF TWO FEET.
3. FIRE ALARM DEVICE MOUNTING HEIGHTS SHALL BE AS FOLLOWS:
   a. PULL STATION - OPERABLE PART OF A MANUALLY ACTUATED ALARM INITIATING DEVICE SHALL BE NOT LESS THAN 42" FROM FINISHED FLOOR; AND TOP OF BOX SHALL NOT BE MORE THAN 48" FROM FINISHED FLOOR. (CBC 11B 308.1.1, NFPA 72 17.14.5)
   b. INTERIOR AUDIBLE NOTIFICATION APPLIANCE - AT LEAST 90" TO THE TOP OF DEVICE ABOVE FINISHED FLOOR AND NOT LESS THAN 6" BELOW FINISHED CEILING. (NFPA 72 18.4.8.1)
   c. WALL-MOUNTED STROBE OR SPEAKER/STROBE - AT LEAST 80" TO BOTTOM OF LENS AND NOT GREATER THAN 96" TO TOP OF LENS ABOVE FINISHED FLOOR. (NFPA 72 18.5.5.1)
4. AUDIBLE SIGNAL DEVICES OF A FIRE ALARM SYSTEM INTENDED TO ALERT ALL OCCUPANTS SHALL BE SO LOCATED AND UNOBSTRUCTED AS TO CAUSE A LEVEL OF AUDIBILITY OF AT LEAST 15 dBA ABOVE AVERAGE AMBIENT SOUND LEVEL BUT NOT LESS THAN 75 dBA AT TEN FEET, OR MORE THAN 110 dBA IN TOTAL. (NFPA 72 18.4.3.1, 18.4.1.2 AND CFC 907.5.2.1.2)
5. AMBIENT NOISE LEVELS SHALL BE CONSTRUED TO MEAN THAT WHICH CAN NORMALLY BE EXPECTED TO EXIST WHEN THE FACILITY, BUILDING, ROOM OR AREA IS FUNCTIONING UNDER NORMAL OPERATIVE OR WORKING CONDITIONS. (CFC 907.5.2.1)
6. AUDIBLE DEVICES SHALL SOUND THE CA UNIFORM FIRE ALARM SIGNAL IN TEMPORAL MODE. PROVIDE AT LEAST ONE EXTERIOR AUDIBLE DEVICE ON BUILDING FOR E OCCUPANCIES. (CFC 907.5.2.1.3)
7. EMERGENCY VOICE/ALARM COMMUNICATION SYSTEM SHALL COMPLY WITH CBC 907.2.3 AND NFPA 72 24.4.2
8. VISUAL DEVICES SHALL NOT EXCEED TWO FLASHES PER SECOND AND SHALL NOT BE SLOWER THAN ONE FLASH EVERY SECOND. (NFPA 72 18.5.3.1)
9. AUTOMATIC SMOKE DETECTION SHALL BE PROVIDED AT THE LOCATION OF EACH FIRE ALARM CONTROL UNIT, NOTIFICATION APPLIANCE CIRCUIT POWER EXTENDER AND SUPERVISING STATION TRANSMITTING EQUIPMENT TO PROVIDE NOTIFICATION OF FIRE AT THAT LOCATION. (NFPA 72 10.4.4)
10. BRANCH CIRCUITS PROTECTING FIRE ALARM EQUIPMENT SHALL BE LABELED PER NFPA 72 10.6.5.2.2 AND SHALL INCLUDE A LISTED CIRCUIT BREAKER LOCKING DEVICE PER NFPA 72 10.6.5.4
11. COMPLETE THE NFPA 72 RECORD OF COMPLETION. TESTING ALL DEVICES AND APPLIANCES. PROVIDE A COPY OF THE COMPLETED RECORD OF COMPLETION TO THE OWNER (SCHOOL DISTRICT), ARCHITECT, LOCAL FIRE AUTHORITY, AND DSA VIA THE PROJECT INSPECTOR. TESTING OF THE ENTIRE SYSTEM SHALL BE MADE IN THE PRESENCE OF THE LOCAL FIRE AUTHORITY AND THE DSA INSPECTOR OF RECORD (IOR). FINAL TEST SHALL INCLUDE READ OUT VERIFICATION FORM FROM CENTER STATION.
12. THE AUTOMATIC ALARM SYSTEM SHALL BE INSTALLED, TESTED, AND MAINTAINED IN ACCORDANCE WITH THE STATE FIRE MARSHAL'S REGULATIONS (CFC 907.8.5, NFPA 72 14.4.1.1, NFPA 72 14.5)

FIRE ALARM CODES AND NOTES N.T.S. 19

FIRE ALARM SYSTEM EQUIPMENT LEGEND

SYMBOL	DESCRIPTION
FACP	FIRE ALARM CONTROL PANEL 'FACP' EDWARDS EST4 SERIES W/AUTOMATIC CHARGING SYSTEM BACKBOX: EDWARDS #3-CAB14B & DOOR: EDWARDS #4-CAB24DR (DIMENSIONS: 37.75"H x 24.12"W x 3.86"D): PROCESSOR: EDWARDS #4-CPU LCD: EDWARDS #4-LCDAUDTEL AUDIO SOURCE UNIT: EDWARDS #4-AUDTELS 20W ZONE AMPLIFIER: EDWARDS #3-ZA20A NETWORK: 4-NET-AD WITH 4-NET-CAT DACT: EDWARDS #3-MODCOMP I/O: EDWARDS #3-IDC8/4 POWER SUPPLY: EDWARDS #4-PPS/M C.S.F.M. #7165-1657:0186
4-ANN M	FIRE ALARM REMOTE ANNUNCIATOR EDWARDS EST4 SERIES BACKBOX: EDWARDS #4-4ANNMT (DIMENSIONS: 13.72"H x 12.73"W x 2.2"D): PROCESSOR: EDWARDS #4-ANNCPU AUDIO SOURCE EXPANDER: EDWARDS #4-ANNAUDTEL LCD: EDWARDS #4-LCDANN MICROPHONE: EDWARDS #4-MIC NETWORK: 4-NET-AD WITH 4-NET-CAT C.S.F.M. #7165-1657:0186
(N) APS	NEW FIRE ALARM AUXILIARY POWER SUPPLY 'APS' UNIT: AUTOMATIC CHARGING SYSTEM, AND INTEGRAL AUDIO AMPLIFIER : EDWARDS #APS-10A, C.S.F.M. #7300-1657:0229 EDWARDS #SIGA-AA50, C.S.F.M. #7300-1657:0121
CS	NEW ADDRESSABLE SYNCRONIZATION OUTPUT MODULE : EDWARDS #SIGA-CC1S, C.S.F.M.#7300-1657:0121 (MOUNT INSIDE NEW FIRE ALARM AUXILIARY POWER SUPPLY 'APS')
SD	NEW ADDRESSABLE SMOKE DETECTOR AND BASE (ON CEILING): EDWARDS #SIGA-OSD; C.S.F.M. #7272-1657:0511 EDWARDS #SIGA-SB; C.S.F.M. #7300-1657:0120
HD	NEW ADDRESSABLE HEAT DETECTOR AND BASE (ON CEILING): EDWARDS #SIGA-HRD; C.S.F.M. #7270-1657:0333 EDWARDS #SIGA-SB; C.S.F.M. #7300-1657:0120
A HD	NEW ADDRESSABLE HEAT DETECTOR AND BASE (IN ATTIC): EDWARDS #SIGA-HRD; C.S.F.M. #7270-1657:0333 EDWARDS #SIGA-SB; C.S.F.M. #7300-1657:0120
SV XX	NEW SPEAKER/STROBE ANNUNCIATOR - WALL MOUNTED (XX REPRESENTS CANDELA) EDWARDS #G4SVRF; C.S.F.M. #7320-1657:0516
S WP	NEW VOICE EVACUATION SYSTEM SPEAKER (OUTDOOR - WEATHERPROOF) EDWARDS #WG4RF-S, WG4RTS C.S.F.M. #7320-1657:0289

REFER TO FIRE ALARM CABLE SCHEDULE ON SHEET E800 FOR FIRE ALARM CABLE MANUFACTURER, PART NUMBERS, AND C.S.F.M. LISTING NUMBERS

FIRE ALARM LEGEND N.T.S. 13

SB575 - GREEN OAKS FAMILY ACADEMY ELEMENTARY SCHOOL FIRE PROTECTION ACT REQUIREMENTS FOR AUTOMATIC FIRE ALARM SYSTEMS

THE FIRE DETECTION AND ALARM SYSTEM FOR THE AREAS AND/OR BUILDINGS WITHIN THE SCOPE OF WORK OF THIS PROJECT:

- [x] COMPLIES WITH SB575
  - [x] A FULLY-AUTOMATIC SYSTEM HAS BEEN DESIGNED FOR ALL AREAS, OR
  - [ ] THE AREAS AND/OR BUILDINGS ARE SPRINKLERED ABOVE THE CEILING, SO HEAT DETECTORS ARE EXEMPTED FROM ABOVE-CEILING AREAS. THE SYSTEM IS OTHERWISE FULLY AUTOMATIC.
  - [x] AN AUTOMATIC DIALER TO A UL-APPROVED CENTRAL STATION:
    - [x] IS EXISTING, OR
    - [ ] IS INCLUDED AS PART OF THIS PROJECT.
- [ ] IS EXEMPT FROM SB575
  - [ ] THE TOTAL PROJECT CONSTRUCTION VALUE IS LESS THAN $200,000, OR
  - [ ] THE PROJECT CONSISTS OF ONLY MODULAR BUILDINGS WHICH ARE TEMPORARY; THESE BUILDINGS SHALL BE REMOVED NO MORE THAN THREE YEARS FROM THE INSTALLATION DATE UNLESS A THREE-YEAR EXTENSION IS APPROVED BY DSA, OR
  - [ ] THE PROJECT IS NOT FUNDED UNDER CHAPTER 12.5 OF THE LEROY F. GREENE SCHOOL FACILITIES ACT. IT WILL BE 100% FUNDED BY LOCAL FUNDS.

SB575 N.T.S. 14

FIRE ALARM MONITORING NOTE

AUTOMATIC FIRE ALARM SYSTEMS SHALL TRANSMIT THE ALARM, SUPERVISORY AND TROUBLE SIGNALS TO AN APPROVED SUPERVISING STATION AS REQUIRED BY NFPA 72 AS AMENDED BY CFC CHAPTER 80. THE SUPERVISING STATION SHALL BE LISTED AS EITHER UUFX OR UUJS BY UNDERWRITERS LABORATORY OR SHALL MEET THE REQUIREMENTS OF FACTORY MUTUAL RESEARCH APPROVAL STANDARD 3011. SUPERVISION OF SYSTEM AND LEASED TELEPHONE LINES SHALL BE ARRANGED BY OWNER.

FIRE ALARM MONITORING NOTE N.T.S. 15

FIRE ALARM SYSTEM OPERATIONAL MATRIX

DEVICE	ACTIVATE EVACUATION SIGNALS/STROBES	SHUTDOWN FIRE/SMOKE DAMPER, OR ACTIVATE SMOKE VENT RELEASE	SHUTDOWN HVAC EQUIPMENT	ANNUNCIATE AT BUILDING FACP AND ALL REMOTE ANNUNCIATORS	SEND SIGNAL TO CENTRAL STATION
FIRE ALARM PANEL SYSTEM TROUBLE				X	X
SMOKE DETECTOR	X	X		X	X
HEAT DETECTOR	X			X	X

FIRE ALARM OPERATIONAL MATRIX 16

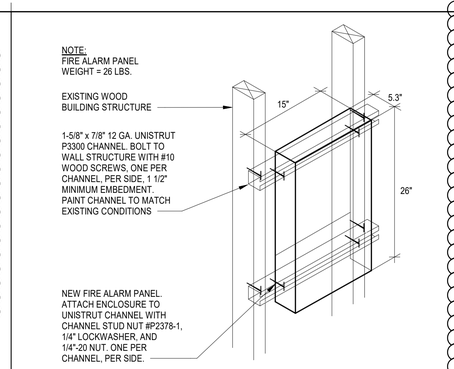

FIRE ALARM PANEL MOUNTING N.T.S. 9

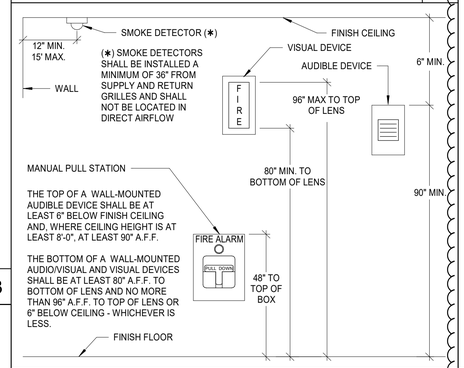

FIRE ALARM DEVICE ELEVATIONS N.T.S. 10

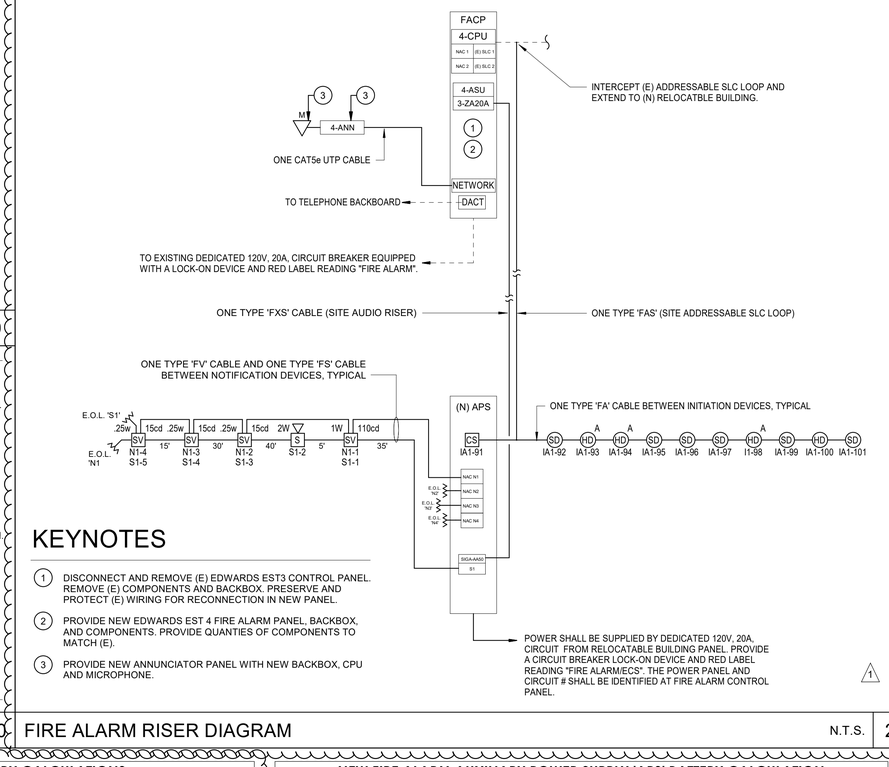

KEYNOTES

1. DISCONNECT AND REMOVE (E) EDWARDS EST3 CONTROL PANEL. REMOVE (E) COMPONENTS AND BACKBOX. PRESERVE AND PROTECT (E) WIRING FOR RECONNECTION IN NEW PANEL.
2. PROVIDE NEW EDWARDS EST 4 FIRE ALARM PANEL, BACKBOX, AND COMPONENTS. PROVIDE QUANTIES OF COMPONENTS TO MATCH (E).
3. PROVIDE NEW ANNUNCIATOR PANEL WITH NEW BACKBOX, CPU AND MICROPHONE.

FIRE ALARM RISER DIAGRAM N.T.S. 2

FIRE ALARM CONTROL PANEL 'FACP' BATTERY CALCULATIONS

QTY.	DEVICE	DESCRIPTION	STANDBY CURRENT	ALARM CURRENT/DEVICE	ALARM CURRENT
1	Edwards EST4	Fire Alarm Control Panel	------*	------*	------*
1	Edwards 4-PPSM	Power Supply	------*	------*	------*
1	4-CPU	Central Processor	0.23000	0.23000	0.23000
1	4-NET-AD	Network adder module	0.09200	0.09200	0.09200
1	4-LCD	LCD Module	0.05000	0.11000	0.11000
1	3-SSDC1	Dual SIGA Controller	0.26400	0.33600	0.33600
1	3-MODCOM	Dact Module	0.06000	0.09500	0.09500
1	4-AUDTELS	Audio Source Unit	0.08000	0.08000	0.08000
1	3-ZA20X	20W Zone Amplifier	0.06200	1.12000	1.12000
1	ANNUNCIATOR	Fire Alarm Remote Annunciator	0.12500	0.12500	0.12500
		TOTALS	0.9630	2.1880	2.1880

TOTAL ALARM AMP-HOURS (15 MIN.) =	0.25	HR	x	2.188	A	=	0.5470	A-H
TOTAL STANDBY AMP-HOURS (24 HRS) =	24	HR	x	0.963	A	=	23.1120	A-H
TOTAL REQUIRED AMP-HOURS =						=	23.6590	A-H
TOTAL DESIGN AMP-HOURS WITH 25% SAFETY FACTOR =						=	29.5738	A-H
BATTERIES							40.000	A-H

FIRE ALARM CONTROL PANEL 'FACP' NOTES:

* FIRE ALARM CONTROL PANEL STANDBY AND ALARM CURRENT IS A CUMLATIVE TOTAL OF ALL INTERNAL COMPONENTS LISTED BELOW. THE POWER SUPPLY IS CONNECTED TO A DEDICATED 120V CIRCUIT. THERE IS NO STANDBY OR ALARM CURRENT DRAW ON THE SYSTEM BATTERIES.

** STANDBY AND ALARM CURRENT FOR ALL INITIATION DEVICES ARE INCLUDED IN THE STANDBY AND ALARM CURRENT FOR THE DUAL SIGA CONTROLLER.

NEW FIRE ALARM AUXILIARY POWER SUPPLY 'APS' BATTERY CALCULATION

QTY.	DEVICE	DESCRIPTION	STANDBY CURRENT	ALARM CURRENT/DEVICE	ALARM CURRENT
1	APS-F	(E) Fire Alarm Auxiliary Power Supply, Edwards #APS10A	0.1050	0.2700	0.2700
1	SIGA-AA50	(E) Fire Alarm Amplifier, Edwards #SIGA-AA50 (2)	0.0020	2.8000	2.8000
		STROBE CURRENT (NAC N1)			
3	SV15	Multi-Candela Speaker Strobe (15cd) Edwards #G4SVRF	-------	0.0280	0.0840
1	SV110	Multi-Candela Speaker Strobe (110cd) #G4SVRF	-------	0.0280	0.0280
		SPEAKER CURRENT (CKT S1)			
3	SP-1/4W	Multi-Candela Speaker Strobe (.25w) Edwards #G4SVRF	-------	-------	------- (3)
1	SP-1W	Multi-Candela Speaker Strobe (1w) Edwards #G4SVRF	-------	-------	------- (3)
1	SP-2W	Exterior Weatherproof Speaker (2W) Edwards #WG4RF-S/WG4RTS	-------	-------	------- (3)
		TOTALS	0.1070	3.1260	3.1820

TOTAL ALARM AMP-HOURS (15 MIN.) =	0.25	HR	x	3.182	A	=	0.7955	A-H
TOTAL STANDBY AMP-HOURS (24 HRS) =	24	HR	x	0.107	A	=	2.5680	A-H
TOTAL REQUIRED AMP-HOURS =						=	**3.3635**	**A-H**
TOTAL DESIGN AMP-HOURS WITH 25% SAFETY FACTOR =						=	**4.2044**	**A-H**
NEW BATTERIES							**7.000**	**A-H**

NAC 'N1' VOLTAGE DROP CALCULATION

QTY.	DEVICE	DESCRIPTION	ALARM CURRENT/DEVICE	TOTAL ALARM CURRENT
3	SV15	Multi-Candela Speaker Strobe (15cd) Edwards #G4SVRF	0.0280	0.0840
1	SV110	Multi-Candela Speaker Strobe (110cd) Edwards #G4SVRF	0.0280	0.0280
		TOTAL CURRENT ADDED TO CIRCUIT	0.000	0.112

LENGTH OF WIRE FROM FACP TO LAST DEVICE (IN FEET) =	**125**
ACTUAL SIZE OF WIRE INSTALLED = **12** AWG **6530** CIRCULAR MILS	
CALCULATED VOLTAGE DROP (IN VDC) =	**0.046**
CIRCUIT VOLTAGE CALCULATED AT LAST DEVICE (IN VDC) =	**24 VDC**
PERCENT VOLTAGE DROP (%) =	**0.19 %**

VOLTAGE DROP FORMULA:
VOLTAGE DROP = 2 X 10.8 x LENGTH OF CIRCUIT TO FARTHEST DEVICE x CURRENT / WIRE SIZE IN C.M.
COMPUTED WITH TOTAL CURRENT ON CIRCUIT AT MAXIMUM LENGTH (CLASS A CIRCUIT).

dB LINE LOSS CALCULATION

SPEAKER VOLTAGE = 70

SPEAKERS	DEVICE POWER (WATTS)	SIGNAL CKT S1 QTY.	SIGNAL CKT S1 WATTS	SIGNAL CKT QTY.	SIGNAL CKT WATTS	SPEAKER QTY TOTAL.	MIN. AMP SIZE (WATTS)
SPEAKER - 1/4 WATT TAP	0.25	3	0.75	0	0	3	4.5
SPEAKER - 1 WATT TAP	1	1	1	0	0	1	
SPEAKER - 2 WATT TAP	1	1	2	0	0	1	
TOTAL POWER ON CKT (P) WATTS		3.75		0			
LOAD RESISTANCE (LR) OHMS		1307		-			
TOTAL WIRE LENGTH (D) FT		125		0			
WIRE SIZE		14 AWG		14 AWG			
TOTAL WIRE RESISTANCE (WR) OHMS		0.815		-			
POWER LOSS (PL) dB		**-0.01**		**-**			

FORMULAS

WIRE RESISTANCE (R) (OHMS/Kft)*		
18 AWG	=	8.08
16 AWG	=	5.08
14 AWG	=	3.26
12 AWG	=	2.05

*VALUES PER NFPA 70

TOTAL WIRE RESISTANCE (WR) = (R / 1000) * D
LOAD RESISTANCE (LR) = (SPEAKER VOLTAGE)^2 / P
POWER LINE LOSS (PL) = 10 * LOG (1- (WR / (WR+LR)))

BATTERY AND VOLTAGE DROP CALCULATIONS N.T.S. 4

MARK	DATE	DESCRIPTION
1	4.22.25	ADDENDUM 05 - FIRE ALARM REV
B	11/13/24	DSA BACKCHECK

Teter, Inc. expressly reserves its common law copyright and other property rights in these plans. This document, the ideas and designs incorporated herein, as an instrument of professional service, is not to be used in whole or in part, for any other project without prior written authorization.

REGISTERED PROFESSIONAL ENGINEER No. E 24293 12-31-24 ELECTRICAL

TETER, INC.
FRESNO HEADQUARTERS
VISALIA | BAKERSFIELD | MODESTO | SAN LUIS OBISPO
ARCHITECTS ENGINEERS CONNECTED

ELOP RELOCATABLE CLASSROOM
PULLIAM ELEMENTARY
230 PRESIDIO WAY
STOCKTON, CA

DRAWING TITLE
FIRE ALARM RISER DIAGRAM & CALCULATIONS

PROJECT NO.
23-12901

DRAWING
E710

AD5-PULL-E02

PLOT DATE: 4/22/2025 5:42:25 PM

\\tetr-file1\Users\lesy.macias_TETRDocuments\12907-E-ROOSEVELT ELEM ELOP_lesly.maciasTBNP5.rvt

FIRE ALARM SYSTEM DESCRIPTION

THE FIRE ALARM SYSTEM DESCRIBED BY THESE DRAWINGS AND ASSOCIATED SPECIFICATIONS IS A MANUAL AND AUTOMATIC SYSTEM. THIS SYSTEM UTILIZES SMOKE DETECTORS ON CEILINGS AND IN THE ROOMS HOUSING THE FIRE ALARM SYSTEM EQUIPMENT, WITH HEAT DETECTORS INSTALLED IN ATTICS. THE SYSTEM IS ADDRESSABLE AND IS WIRED CLASS 'B' WITHIN THE BUILDINGS AND CLASS 'B' BETWEEN BUILDINGS.

FIRE ALARM APPROVAL

THE FIRE ALARM SYSTEM DESIGN IS A "COMPLETE PLAN SUBMITTAL" PER DSA FIRE ALARM SUBMITTAL GUIDELINES. THE CONTRACTOR SHALL INSTALL THE SYSTEM AS SHOWN AND AS HEREIN SPECIFIED. IF ANY SUBSTITUTION OF FIRE ALARM EQUIPMENT IS TO BE REQUESTED, SUCH REQUEST SHALL BE MADE A MINIMUM OF TWO WEEKS PRIOR TO PROJECT BID DATE. THE CONTRACTOR SHALL BE RESPONSIBLE FOR SUBMITTING THE SUBSTITUTION PER THE DSA GUIDELINES AND SHALL PAY ALL ADDITIONAL COSTS REQUIRED TO ACCOMMODATE REVIEW OF THE SUBSTITUTED FIRE ALARM SYSTEM BY DSA, WHETHER OR NOT SUCH APPROVAL IS GIVEN. THE CONTRACTOR'S SUBMITTAL SHALL INCLUDE MANUFACTURER'S CATALOG CUT SHEETS AND CSFM LISTING SHEETS FOR THE INDIVIDUAL COMPONENTS COMPRISING THE SUBSTITUTED FIRE ALARM SYSTEM, BATTERY LOAD CALCULATIONS AND VOLTAGE DROP CALCULATIONS FOR EACH SIGNALING CIRCUIT.

APPLICABLE CODES AND STANDARDS

2022 CA BUILDING CODE - CCR, TITLE 24, PART 2, VOLUMES 1 & 2
(2021 IBC AND CALIFORNIA AMENDMENTS)
2022 CA ELECTRICAL CODE - CCR, TITLE 24, PART 3
(2020 NEC AND CALIFORNIA AMENDMENTS)
2022 CA MECHANICAL CODE - CCR, TITLE 24, PART 4
(2021 UMC AND CALIFORNIA AMENDMENTS)
2022 CA PLUMBING CODE - CCR, TITLE 24, PART 5
(2021 UPC AND CALIFORNIA AMENDMENTS)
2022 CA FIRE CODE - CCR, TITLE 24, PART 9
(2021 IFC AND CALIFORNIA AMENDMENTS)
2022 CA REFERENCE STANDARDS CODE - CCR, TITLE 24, PART 12
2022 NFPA 13, INSTALLATION OF SPRINKLER SYSTEMS AND 2022 CALIFORNIA AMENDMENTS
2022 NFPA 72, NATIONAL FIRE ALARM CODE, AND 2022 CALIFORNIA AMENDMENTS
PUBLIC SAFETY, STATE FIRE MARSHAL REGULATIONS - CCR, TITLE 19
DSA GUIDELINES FOR FIRE AND LIFE SAFETY SYSTEMS, DIVISION OF THE STATE ARCHITECT OFFICE OF REGULATION SERVICES.

FIRE ALARM GENERAL NOTES

1. UNDERGROUND AND EXTERIOR CONDUITS WILL HAVE WATERTIGHT FITTINGS. (CEC 110.11 AND CEC 300.6)
2. OUTLETS ON OPPOSITE SIDES OF A FIRE RATED WALL SHALL BE INSTALLED WITH A MINIMUM HORIZONTAL SPACING OF TWO FEET.
3. FIRE ALARM DEVICE MOUNTING HEIGHTS SHALL BE AS FOLLOWS:
   a. PULL STATION - OPERABLE PART OF A MANUALLY ACTUATED ALARM INITIATING DEVICE SHALL BE NOT LESS THAN 42" FROM FINISHED FLOOR; AND TOP OF BOX SHALL NOT BE MORE THAN 48" FROM FINISHED FLOOR. (CBC 11B 308.1.1, NFPA 72 17.14.5)
   b. INTERIOR AUDIBLE NOTIFICATION APPLIANCE - AT LEAST 90" TO THE TOP OF DEVICE ABOVE FINISHED FLOOR AND NOT LESS THAN 6" BELOW FINISHED CEILING. (NFPA 72 18.4.8.1)
   c. WALL-MOUNTED STROBE OR SPEAKER/STROBE - AT LEAST 80" TO BOTTOM OF LENS AND NOT GREATER THAN 96" TO TOP OF LENS ABOVE FINISHED FLOOR. (NFPA 72 18.5.5.1)
4. AUDIBLE SIGNAL DEVICES OF A FIRE ALARM SYSTEM INTENDED TO ALERT ALL OCCUPANTS SHALL BE SO LOCATED AND UNOBSTRUCTED AS TO CAUSE A LEVEL OF AUDIBILITY OF AT LEAST 15 dBA ABOVE AVERAGE AMBIENT SOUND LEVEL BUT NOT LESS THAN 75 dBA AT TEN FEET, OR MORE THAN 110 dBA IN TOTAL. (NFPA 72 18.4.3.1, 18.4.1.2 AND CFC 907.5.2.1.2)
5. AMBIENT NOISE LEVELS SHALL BE CONSTRUED TO MEAN THAT WHICH CAN NORMALLY BE EXPECTED TO EXIST WHEN THE FACILITY, BUILDING, ROOM OR AREA IS FUNCTIONING UNDER NORMAL OPERATIVE OR WORKING CONDITIONS. (CFC 907.5.2.1.1)
6. AUDIBLE DEVICES SHALL SOUND THE CA UNIFORM FIRE ALARM SIGNAL IN TEMPORAL MODE. PROVIDE AT LEAST ONE EXTERIOR AUDIBLE DEVICE ON BUILDING FOR E OCCUPANCIES. (CFC 907.5.2.1.3)
7. EMERGENCY VOICE/ALARM COMMUNICATION SYSTEM SHALL COMPLY WITH CBC 907.2.3 AND NFPA 72 24.4.2
8. VISUAL DEVICES SHALL NOT EXCEED TWO FLASHES PER SECOND AND SHALL NOT BE SLOWER THAN ONE FLASH EVERY SECOND. (NFPA 72 18.5.3.1)
9. AUTOMATIC SMOKE DETECTION SHALL BE PROVIDED AT THE LOCATION OF EACH FIRE ALARM CONTROL UNIT, NOTIFICATION APPLIANCE CIRCUIT POWER EXTENDER AND SUPERVISING STATION TRANSMITTING EQUIPMENT TO PROVIDE NOTIFICATION OF FIRE AT THAT LOCATION. (NFPA 72 10.4.4)
10. BRANCH CIRCUITS PROTECTING FIRE ALARM EQUIPMENT SHALL BE LABELED PER NFPA 72 10.6.5.2.2 AND SHALL INCLUDE A LISTED CIRCUIT BREAKER LOCKING DEVICE PER NFPA 72 10.6.5.4
11. COMPLETE THE NFPA 72 RECORD OF COMPLETION, TESTING ALL DEVICES AND APPLIANCES. PROVIDE A COPY OF THE COMPLETED RECORD OF COMPLETION TO THE OWNER (SCHOOL DISTRICT), ARCHITECT, LOCAL FIRE AUTHORITY, AND DSA VIA THE PROJECT INSPECTOR. TESTING OF THE ENTIRE SYSTEM SHALL BE MADE IN THE PRESENCE OF THE LOCAL FIRE AUTHORITY AND THE DSA INSPECTOR OF RECORD (IOR). FINAL TEST SHALL INCLUDE READ OUT VERIFICATION FORM FROM CENTER STATION.
12. THE AUTOMATIC ALARM SYSTEM SHALL BE INSTALLED, TESTED, AND MAINTAINED IN ACCORDANCE WITH THE STATE FIRE MARSHAL'S REGULATIONS (CFC 907.8.5, NFPA 72 14.4.1.1, NFPA 72 14.5)

FIRE ALARM CODES AND NOTES N.T.S. 19

FIRE ALARM SYSTEM EQUIPMENT LEGEND

SYMBOL	DESCRIPTION
FACP-1 / FACP-2	FIRE ALARM CONTROL PANEL 'FACP-1' & 'FACP-2' EDWARDS EST4 SERIES W/AUTOMATIC CHARGING SYSTEM BACKBOX: EDWARDS #3-CAB14B & DOOR: EDWARDS #4-CAB24DR (DIMENSIONS: 37.75"H x 24.12"W x 3.86"D): PROCESSOR: EDWARDS #4-CPU LCD: EDWARDS #4-LCDAUDTEL AUDIO SOURCE UNIT: EDWARDS #4-AUDTELS 20W ZONE AMPLIFIER: EDWARDS #3-ZA20A NETWORK: 4-NET-AD WITH 4-NET-CAT DACT: EDWARDS #3-MODCOMP I/O: EDWARDS #3-IDC8/4 POWER SUPPLY: EDWARDS #4-PPS/M C.S.F.M. #7165-1657:0186
4-ANN / M	FIRE ALARM REMOTE ANNUNCIATOR EDWARDS EST4 SERIES BACKBOX: EDWARDS #4-4ANNMT (DIMENSIONS: 13.72"H x 12.73"W x 2.2"D): PROCESSOR: EDWARDS #4-ANNCPU AUDIO SOURCE EXPANDER: EDWARDS #4-ANNAUDTEL LCD: EDWARDS #4-LCDANN MICROPHONE: EDWARDS #4-MIC NETWORK: 4-NET-AD WITH 4-NET-CAT C.S.F.M. #7165-1657:0186
CS	NEW ADDRESSABLE SYNCRONIZATION OUTPUT MODULE EDWARDS #SIGA-CC1S, C.S.F.M.#7300-1657:0121 (MOUNT INSIDE NEW FIRE ALARM AUXILIARY POWER SUPPLY 'APS')
SD	NEW ADDRESSABLE SMOKE DETECTOR AND BASE (ON CEILING): EDWARDS #SIGA-OSD; C.S.F.M. #7272-1657:0511 EDWARDS #SIGA-SB; C.S.F.M. #7300-1657:0120
HD	NEW ADDRESSABLE HEAT DETECTOR AND BASE (ON CEILING): EDWARDS #SIGA-HRD; C.S.F.M. #7270-1657:0333 EDWARDS #SIGA-SB; C.S.F.M. #7300-1657:0120
A HD	NEW ADDRESSABLE HEAT DETECTOR AND BASE (IN ATTIC): EDWARDS #SIGA-HRD; C.S.F.M. #7270-1657:0333 EDWARDS #SIGA-SB; C.S.F.M. #7300-1657:0120
SV XX	NEW SPEAKER/STROBE ANNUNCIATOR - WALL MOUNTED (XX REPRESENTS CANDELA) EDWARDS #G4SVRF; C.S.F.M. #7320-1657:0516
S WP	NEW VOICE EVACUATION SYSTEM SPEAKER (OUTDOOR - WEATHERPROOF) EDWARDS #WG4RF-S, WG4RTS C.S.F.M. #7320-1657:0289

FIRE ALARM LEGEND N.T.S. 13

SB575 - GREEN OAKS FAMILY ACADEMY ELEMENTARY SCHOOL FIRE PROTECTION ACT REQUIREMENTS FOR AUTOMATIC FIRE ALARM SYSTEMS

THE FIRE DETECTION AND ALARM SYSTEM FOR THE AREAS AND/OR BUILDINGS WITHIN THE SCOPE OF WORK OF THIS PROJECT:

- [X] COMPLIES WITH SB575
  - [X] A FULLY-AUTOMATIC SYSTEM HAS BEEN DESIGNED FOR ALL AREAS, OR
  - [ ] THE AREAS AND/OR BUILDINGS ARE SPRINKLERED ABOVE THE CEILING, SO HEAT DETECTORS ARE EXEMPTED FROM ABOVE-CEILING AREAS. THE SYSTEM IS OTHERWISE FULLY AUTOMATIC.
  - [X] AN AUTOMATIC DIALER TO A UL-APPROVED CENTRAL STATION:
    - [X]
    - [ ]
- [ ] IS EXEMPT FROM SB575
  - [ ] THE TOTAL PROJECT CONSTRUCTION VALUE IS LESS THAN $200,000, OR
  - [ ] THE PROJECT CONSISTS OF ONLY MODULAR BUILDINGS WHICH ARE TEMPORARY; THESE BUILDINGS SHALL BE REMOVED NO MORE THAN THREE YEARS FROM THE INSTALLATION DATE UNLESS A THREE-YEAR EXTENSION IS APPROVED BY DSA, OR
  - [ ] THE PROJECT IS NOT FUNDED UNDER CHAPTER 12.5 OF THE LEROY F. GREENE SCHOOL FACILITIES ACT. IT WILL BE 100% FUNDED BY LOCAL FUNDS.

SB575 N.T.S. 14

FIRE ALARM MONITORING NOTE

AUTOMATIC FIRE ALARM SYSTEMS SHALL TRANSMIT THE ALARM, SUPERVISORY AND TROUBLE SIGNALS TO AN APPROVED SUPERVISING STATION AS REQUIRED BY NFPA 72 AS AMENDED BY CFC CHAPTER 80. THE SUPERVISING STATION SHALL BE LISTED AS EITHER UUFX OR UUJS BY UNDERWRITERS LABORATORY OR SHALL MEET THE REQUIREMENTS OF FACTORY MUTUAL RESEARCH APPROVAL STANDARD 3011. SUPERVISION OF SYSTEM AND LEASED TELEPHONE LINES SHALL BE ARRANGED BY OWNER.

FIRE ALARM MONITORING NOTE N.T.S. 15

FIRE ALARM SYSTEM OPERATIONAL MATRIX

DEVICE	ACTIVATE EVACUATION SIGNALS/STROBES	SHUTDOWN FIRE/SMOKE DAMPER, OR ACTIVATE SMOKE VENT RELEASE	SHUTDOWN HVAC EQUIPMENT	ANNUNCIATE AT BUILDING FACP AND ALL REMOTE ANNUNCIATORS	SEND SIGNAL TO CENTRAL STATION
FIRE ALARM PANEL SYSTEM TROUBLE				X	X
SMOKE DETECTOR	X			X	X
HEAT DETECTOR	X			X	X

FIRE ALARM OPERATIONAL MATRIX N.T.S. 16

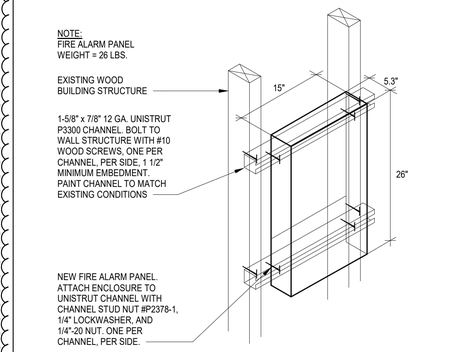

FIRE ALARM PANEL MOUNTING N.T.S. 9

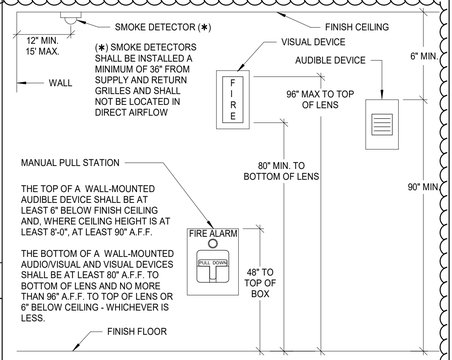

FIRE ALARM DEVICE ELEVATIONS N.T.S. 10

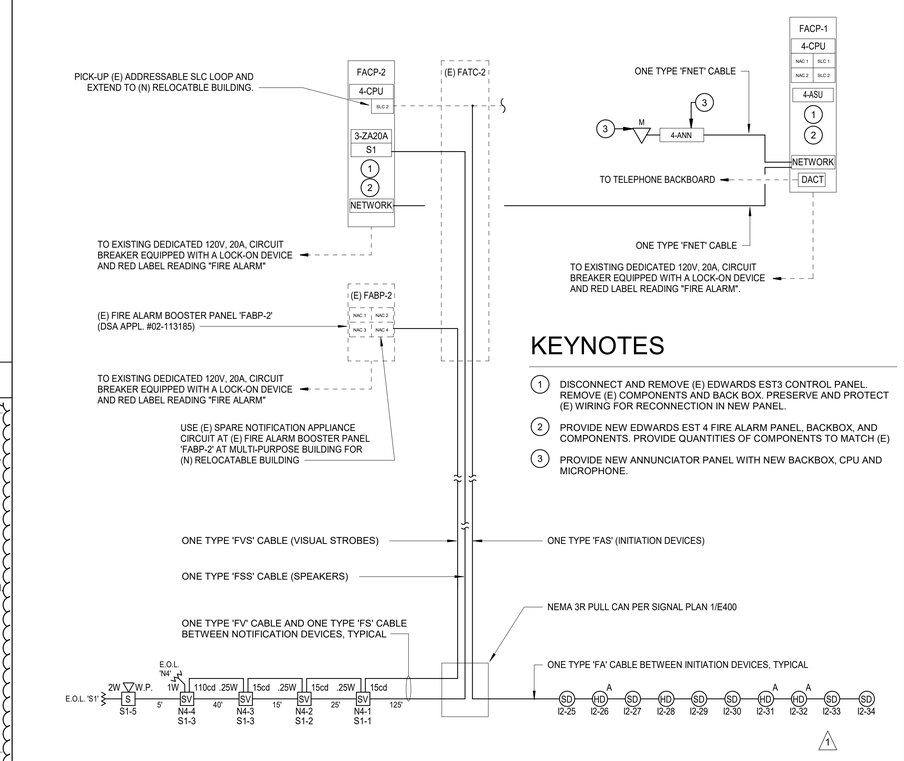

KEYNOTES

1. DISCONNECT AND REMOVE (E) EDWARDS EST3 CONTROL PANEL. REMOVE (E) COMPONENTS AND BACK BOX. PRESERVE AND PROTECT (E) WIRING FOR RECONNECTION IN NEW PANEL.
2. PROVIDE NEW EDWARDS EST 4 FIRE ALARM PANEL, BACKBOX, AND COMPONENTS. PROVIDE QUANTITIES OF COMPONENTS TO MATCH (E)
3. PROVIDE NEW ANNUNCIATOR PANEL WITH NEW BACKBOX, CPU AND MICROPHONE.

FIRE ALARM RISER DIAGRAM N.T.S. 2

FIRE ALARM CONTROL PANEL 'FACP-1' BATTERY CALCULATIONS

QTY.	DEVICE	DESCRIPTION	STANDBY CURRENT	ALARM CURRENT/ DEVICE	ALARM CURRENT
1	EST4	Fire Aalrm Control Panel - Base panel	-----	-----	-----
1	4-PPS/M	Power Supply	-----	-----	-----
1	4-CPU	Central Processor	0.230	0.230	0.230
1	4-NET-AD	Network Adder Module	0.092	0.092	0.092
1	4-LCD	Main Color Touchscreen LCD Display	0.050	0.110	0.110
1	3-SSDC1	SIGA Controller	0.144	0.204	0.204
1	3-MODCOM	Dact Module	0.600	0.095	0.095
1	ANNUNCIATOR	EST4 Series Annunciator with LCD and MIC	0.125	0.125	0.125
1	3-EVPWRA	Power Supply for EVDVRA Drivers	0.012	0.012	0.012
1	4-AUDTELS	Audio Source Unit	0.08500	0.101	0.101
		TOTALS	**1.338**	**0.969**	**0.969**

TOTAL ALARM AMP-HOURS (15 MIN.) =	0.25	HR	x	0.969	A	=	0.2423 A-H
TOTAL STANDBY AMP-HOURS (24 HRS) =	24	HR	x	1.338	A	=	32.1120 A-H
TOTAL REQUIRED AMP-HOURS =						=	**32.3543 A-H**
TOTAL DESIGN AMP-HOURS WITH 20% SAFETY FACTOR =						=	**38.8251 A-H**
BATTERIES							**46.000 A-H**

FIRE ALARM CONTROL PANEL 'FACP-2' BATTERY CALCULATIONS

QTY.	DEVICE	DESCRIPTION	STANDBY CURRENT	ALARM CURRENT/ DEVICE	ALARM CURRENT
1	EST4	Fire Aalrm Control Panel - Base panel	-----	-----	-----
1	4-PPS/M	Power Supply	-----	-----	-----
1	4-CPU	Central Processor	0.230	0.230	0.230
1	4-NET-AD	Network Adder Module	0.092	0.092	0.092
1	4-LCD	Main Color Touchscreen LCD Display	0.050	0.110	0.110
1	3-SSDC1	SIGA Controller	0.144	0.204	0.204
1	3-ZA20x	20W Zone Amplifier	0.062	1.120	1.120
6	SIGA2-PS	Addressable Smoke Detectors	0.00045	0.018	0.108
4	SIGA2-HRS	Addressable Heat Detectors	0.00045	0.018	0.072
		TOTALS	**0.579**	**1.792**	**1.936**

TOTAL ALARM AMP-HOURS (15 MIN.) =	0.25	HR	x	1.936	A	=	0.4840 A-H
TOTAL STANDBY AMP-HOURS (24 HRS) =	24	HR	x	0.579	A	=	13.8936 A-H
TOTAL REQUIRED AMP-HOURS =						=	**14.3776 A-H**
TOTAL DESIGN AMP-HOURS WITH 20% SAFETY FACTOR =						=	**17.2531 A-H**
BATTERIES							**18.000 A-H**

dB LINE LOSS CALCULATION

SPEAKER VOLTAGE = 24

SPEAKERS	DEVICE POWER (WATTS)	SIGNAL CKT S1 QTY.	SIGNAL CKT S1 WATTS	SIGNAL CKT S2 QTY.	SIGNAL CKT S2 WATTS	SPEAKER QTY TOTAL.	MIN. AMP SIZE (WATTS)
SPEAKER - 1/4 WATT TAP	0.25	3	0.75	0	0	3	4.5
SPEAKER - 1/2 WATT TAP	0.5	0	0	0	0	0	
SPEAKER - 1 WATT TAP	1	1	1	0	0	1	
SPEAKER - 2 WATT TAP	2	1	2	0	0	1	
TOTAL POWER ON CKT (P) WATTS		3.75		0			
LOAD RESISTANCE (LR) OHMS		154		-			
TOTAL WIRE LENGTH (D) FT		210		0			
WIRE SIZE		14 AWG		14 AWG			
TOTAL WIRE RESISTANCE (WR) OHMS		1.3692		-			
POWER LOSS (PL) dB		**-0.04**		**-**			

FORMULAS

WIRE RESISTANCE (R) (OHMS/Kft)*		
18 AWG	=	8.08
16 AWG	=	5.08
14 AWG	=	3.26
12 AWG	=	2.05

*VALUES PER NFPA 70

TOTAL WIRE RESISTANCE (WR) = (R / 1000) * D
LOAD RESISTANCE (LR) = (SPEAKER VOLTAGE)^2 / P
POWER LINE LOSS (PL) = 10 * LOG (1- (WR / (WR+L...

NAC 'N4' VOLTAGE DROP CALCULATION

QTY.	DEVICE	DESCRIPTION	ALARM CURRENT/ DEVICE	TOTAL ALARM CURRENT
3	SV15	Multi-Candela Speaker Strobe (15cd) Edwards #G4SVRF	0.0280	0.0840
1	SV110	Multi-Candela Speaker Strobe (110cd) Edwards #G4SVRF	0.0280	0.0280
		TOTAL CURRENT ADDED TO CIRCUIT	0.000	0.112

LENGTH OF WIRE FROM FACP TO LAST DEVICE (IN FEET) =	**210**
ACTUAL SIZE OF WIRE INSTALLED = **12** AWG **6530** CIRCULAR MILS	
CALCULATED VOLTAGE DROP (IN VDC) =	**0.078**
CIRCUIT VOLTAGE CALCULATED AT LAST DEVICE (IN VDC) =	**23.9 VDC**
PERCENT VOLTAGE DROP (%) =	**0.32 %**

VOLTAGE DROP FORMULA:
VOLTAGE DROP = 2 X 10.8 x LENGTH OF CIRCUIT TO FARTHEST DEVICE x CURRENT / WIRE SIZE IN C.M.
COMPUTED WITH TOTAL CURRENT ON CIRCUIT AT MAXIMUM LENGTH (CLASS A CIRCUIT).

BATTERY AND VOLTAGE DROP CALCULATIONS N.T.S. 4

PLOT DATE: 4/22/2025 8:42:01 PM

Teter, Inc. expressly reserves its common law copyright and other property rights in these plans. This document, the ideas and designs incorporated herein, as an instrument of professional service, is not to be used in whole or in part, for any other project without prior written authorization.

MARK	DATE	DESCRIPTION
1	4.22.25	ADDENDUM 05 - FIRE ALARM REV
B	11/19/24	DSA BACKCHECK

TETER, INC.
ARCHITECTS ENGINEERS CONNECTED
FRESNO HEADQUARTERS
VISALIA | BAKERSFIELD | MODESTO | SAN LUIS OBISPO

STOCKTON UNIFIED SCHOOL DISTRICT
ROOSEVELT E.S. ELOP
776 S. BROADWAY AVE.
STOCKTON, CA

DRAWING TITLE
FIRE ALARM RISER DIAGRAM & CALCULATIONS

PROJECT NO.
23-12907.00

DRAWING
E710

AD5-ROO-E03

\\tetr-file1\Users\lesly.macias_TETR\Documents\12907-E-ROOSEVELT ELEM ELOP_lesly.maciasTBNP5.rvt

FIRE ALARM CABLE SCHEDULE

CABLE DESIGNATION	DESCRIPTION	MANUFACTURER & CATALOG #	OUTER JACKET COLOR	SYSTEM	USE
'FAS'	1 PR, #16 AWG STRANDED UNSHIELDED AQUASEAL FPL	WEST PENN #AQC225	BLACK	FIRE ALARM	SITE ADDRESSABLE SLC LOOP CABLE - EXTERIOR/OUTDOOR
'FA'	1 PR, #16 AWG SOLID UNSHIELDED FPL	WEST PENN #D990	RED	FIRE ALARM	ADDRESSABLE SLC LOOP CABLE - INTERIOR
'FSS'	1 PR, #14 AWG SOLID SHIELDED, FPL	WEST PENN #AQC295	BLACK	FIRE ALARM	AUDIBLE (SPEAKER) NOTIFICATION APPLIANCE CIRCUIT - EXTERIOR/OUTDOOR
'FS'	1 PR, #14 AWG SOLID SHIELDED, FPLP	WEST PENN #60992B	RED	FIRE ALARM	AUDIBLE (SPEAKER) NOTIFICATION APPLIANCE CIRCUIT - INTERIOR
'FVS'	1 PR, #12 STRANDED UNSHIELDED FPL	WEST PENN #AQ227	BLACK	FIRE ALARM	VISUAL (STROBE) NOTIFICATION APPLIANCE CIRCUIT - EXTERIOR/OUTDOOR
'FV'	1 PR, #12 SOLID UNSHIELDED FPLP	WEST PENN #60995B	RED	FIRE ALARM	VISUAL (STROBE) NOTIFICATION APPLIANCE CIRCUIT - INTERIOR
'FNET'	4-STRAND MULTI-MODE FIBER OPTIC CABLE (62.5/125um)	CORNING INFINICOR 300 OR EQUIVALENT	BLACK	FIRE ALARM	SITE OPTICAL FIBER FIRE ALARM NETWORK

1

FIRE ALARM CABLE SCHEDULE N.T.S. 13

TELECOMMUNICATION CABLE SCHEDULE

CABLE DESIGNATION	DESCRIPTION	MANUFACTURER & CATALOG #	OUTER JACKET COLOR	SYSTEM	USE
'SFO'	12-STRAND SINGLE-MODE FIBER OPTIC CABLE	CORNING SMF-28e+ OR EQUIVALENT	BLACK	DATA	SITE OPTICAL FIBER DATA NETWORK
'D'	4 UTP #24 AWG CATEGORY 6 FILLED OUTDOOR	COMMSCOPE MEDIA 6 #6NF4+	BLACK	DATA	HORIZONTAL DATA CABLE - OUTDOOR
'H'	ACTIVE FIBER OPTIC HDMI CABLE	CHROMIS #AOC-18G-R-OBXP OR EQUIVALENT	BLACK	VIDEO	BUILDING HDM1 CABLE M/M

TELECOMMUNICATIONS CABLE SCHEDULE N.T.S. 14

LIGHTING FIXTURE SCHEDULE

FIXTURE DESIGNATION	FIXTURE VOLTAGE	FIXTURE WATTAGE	MOUNTING	DRIVER & COLOR TEMP	DESCRIPTION	MANUFACTURER	CATALOG #
S1	120 V	69	POLE PER 8/E600	LED - 4000K	SINGLE HEAD POLE MOUNTED SITE LIGHT + 12'-6" x 5" SQUARE STRAIGHT STEEL POLE WITH HANDHOLE	LITHONIA	DSX0 LED-P3-40K-80CRI-T5LG-MVOLT-SPA-PIR-DDBX D + SSS-12-6-5G-DM19AS-CPL12/15B-EHH15D-DDB XD
W2	120 V	32	WALL MOUNTED	LED - 4000K	WALL MOUNTED LED LIGHT FIXTURE, +8'AFF (13.5 LBS)	LITHONIA	WDGE2 LED-P3-40K-80CRI-TFTM-MVOLT-SRM

LIGHT FIXTURE SCHEDULE N.T.S. 15

PLOT DATE: 4/22/2025 8:42:03 PM

CODES, RULES & REGULATIONS

ALL WORK SHOWN HEREIN SHALL COMPLY WITH THE CURRENT REGULATIONS OF THE CALIFORNIA STATE FIRE MARSHAL, CALIFORNIA BUILDING CODE, TITLES 8 AND 19 THROUGH 24, SERVING UTILITY RULES AND ALL OTHER APPLICABLE STATE ORDINANCES. NOTHING IN THESE PLANS OR SPECIFICATIONS SHALL BE INTERPRETED AS TO PERMIT ANY WORK NOT IN CONFORMANCE WITH THESE CODES, RULES AND REGULATIONS. WHERE WORK OF A GREATER DEGREE IS INDICATED IN THESE PLANS OR SPECIFICATIONS, THAT REQUIREMENT SHALL GOVERN SUCH WORK.

C.E.C. TITLE 24 COMPLIANCE

THE LIGHTING AND LIGHTING CONTROL SYSTEMS DESIGN DEPICTED HEREIN IS IN COMPLIANCE WITH REQUIREMENTS OF THE CURRENT CALIFORNIA ENERGY COMMISSION EFFICIENCY STANDARDS FOR NONRESIDENTIAL BUILDINGS.

GENERAL NOTES (TYPICAL)

1. REFER TO THE ARCHITECTURAL REFLECTED CEILING PLAN FOR THE EXACT LOCATION OF ALL CEILING MOUNTED ELECTRICAL EQUIPMENT.
2. REFER TO THE MECHANICAL AND PLUMBING PLANS FOR THE EXACT LOCATION OF ALL MECHANICAL, HVAC AND PLUMBING EQUIPMENT.
3. VERIFY THE EXACT LOCATION OF ALL FLOOR BOXES AND ASSOCIATED TRENCH, BACKFILL AND SAWCUTTING REQUIREMENTS WITH THE ARCHITECT PRIOR TO COMMENCEMENT OF ANY ROUGH -IN WORK FOR THIS EQUIPMENT.
4. COORDINATE ELECTRICAL PANEL AND TERMINAL CABINET LOCATIONS AND ROUTING OF UNDERGROUND CONDUITS WITH THE ARCHITECTURAL AND STRUCTURAL DRAWINGS PRIOR TO COMMENCEMENT OF ANY ROUGH-IN WORK FOR THIS EQUIPMENT.
5. COORDINATE ALL ELECTRICAL WORK WITH OTHER TRADES WHOSE WORK WILL IMPACT PLACEMENT OR CONNECTION OF ELECTRICALLY POWERED EQUIPMENT REGARDLESS OF RESPONSIBILITY FOR SUPPLYING EQUIPMENT.

MEP COMPONENT ANCHORAGE NOTE

ALL MECHANICAL, PLUMBING, AND ELECTRICAL COMPONENTS SHALL BE ANCHORED AND INSTALLED PER THE DETAILS ON THE DSA APPROVED CONSTRUCTION DOCUMENTS. THE FOLLOWING COMPONENTS SHALL BE ANCHORED OR BRACED TO MEET THE FORCE AND DISPLACEMENT REQUIREMENTS PRESCRIBED IN THE 2022 CBC, SECTIONS 1617A.1.18 THROUGH 1617A.1.26 AND ASCE 7-16 CHAPTERS 13, 26 AND 30.

1. ALL PERMANENT EQUIPMENT AND COMPONENTS.
2. TEMPORARY, MOVEABLE OR MOBILE EQUIPMENT THAT IS PERMANENTLY ATTACHED (E.G. HARD WIRED) TO THE BUILDING UTILITY SERVICES SUCH AS ELECTRICITY, GAS OR WATER. "PERMANENTLY ATTACHED" SHALL INCLUDE ALL ELECTRICAL CONNECTIONS EXCEPT PLUGS FOR 110/220 VOLT RECEPTACLES HAVING FLEXIBLE CABLE.
3. TEMPORARY, MOVABLE OR MOBILE EQUIPMENT EQUIPMENT WHICH IS HEAVIER THAN 400 POUNDS OR HAS A CENTER OF MASS LOCATED 4 FEET OR MORE ABOVE THE ADJACENT FLOOR OR ROOF LEVEL THAT DIRECTLY SUPPORT THE COMPONENT IS REQUIRED TO BE RESTRAINED IN A MANNER APPROVED BY DSA.

THE FOLLOWING MECHANICAL AND ELECTRICAL COMPONENTS SHALL BE POSITIVELY ATTACHED TO THE STRUCTURE BUT NEED NOT DEMONSTRATE DESIGN COMPLIANCE WITH THE REFERENCES NOTED ABOVE. THESE COMPONENTS SHALL HAVE FLEXIBLE CONNECTIONS PROVIDED BETWEEN THE COMPONENT AND ASSOCIATED DUCTWORK, PIPING, AND CONDUIT. FLEXIBLE CONNECTIONS MUST ALLOW MOVEMENT IN BOTH TRANSVERSE AND LONGITUDINAL DIRECTIONS:

A. COMPONENTS WEIGHING LESS THAN 400 POUNDS AND HAVE A CENTER OF MASS LOCATED 4 FEET OR LESS ABOVE THE ADJACENT FLOOR OR ROOF LEVEL THAT DIRECTLY SUPPORT THE COMPONENT.

B. COMPONENTS WEIGHING LESS THAN 20 POUNDS, OR IN THE CASE OF DISTRIBUTED SYSTEMS, LESS THAN 5 POUNDS PER FOOT, WHICH ARE SUSPENDED FROM A ROOF OR FLOOR OR HUNG FROM A WALL.

THE ANCHORAGE OF ALL MECHANICAL, ELECTRICAL AND PLUMBING COMPONENTS SHALL BE SUBJECT TO THE APPROVAL OF THE DESIGN PROFESSIONAL IN GENERAL RESPONSIBLE CHARGE OR STRUCTURAL ENGINEER DELEGATED RESPONSIBILITY AND ACCEPTANCE BY DSA. THE PROJECT INSPECTOR WILL VERIFY THAT ALL COMPONENTS AND EQUIPMENT HAVE BEEN ANCHORED IN ACCORDANCE WITH THE ABOVE REQUIREMENTS.

PIPING, DUCTWORK, AND ELECTRICAL DISTRIBUTION SYSTEM BRACING NOTE:

PIPING, DUCTWORK, AND ELECTRICAL DISTRIBUTION SYSTEMS SHALL BE BRACED TO COMPLY WITH THE FORCES AND DISPLACEMENTS PRESCRIBED IN ASCE 7-16 SECTION 13.3 AS DEFINED IN ASCE 7-16 SECTION 13.6.5, 13.6.6, 13.6.7, 13.6.8; AND 2019 CBC, SECTIONS 1617A.1.24, 1617A.1.25, AND 1617A.1.26.

THE METHOD OF SHOWING BRACING AND ATTACHMENTS TO THE STRUCTURE FOR THE IDENTIFIED DISTRIBUTION SYSTEM ARE AS NOTED BELOW. WHEN BRACING AND ATTACHMENTS ARE BASED ON A PREAPPROVED INSTALLATION GUIDE (E.G., OSHPD OPM FOR 2013 CBC OR LATER), COPIES OF THE BRACING SYSTEM INSTALLATION GUIDE OR MANUAL SHALL BE AVAILABLE ON THE JOBSITE PRIOR TO THE START OF AND DURING THE HANGING AND BRACING OF THE DISTRIBUTION SYSTEMS. THE STRUCTURAL ENGINEER OF RECORD SHALL VERIFY THE ADEQUACY OF THE STRUCTURE TO SUPPORT THE HANGER AND BRACE LOADS.

ELECTRICAL DISTRIBUTION SYSTEMS:

SHALL COMPLY WITH THE APPLICABLE OSHPD PRE-APPROVAL (OPM#) #OPM-0052-13, "SEISMIC BRACING AND SUPPORT SYSTEMS"

GENERAL NOTES N.T.S. 12

ELECTRICAL SYMBOL LEGEND

DIMENSIONS INDICATED ARE MEASURED TO CENTERLINE OF ENCLOSURE, UNLESS OTHERWISE NOTED
NOTE: SOME SYMBOLS SHOWN MAY NOT APPLY TO THIS PROJECT

SYMBOL	DESCRIPTION	SYMBOL	DESCRIPTION
E.P.	DENOTES EXPLOSION PROOF CONSTRUCTION	$ a	SINGLE POLE AC SNAP SWITCH @ +48" TO TOP OF BOX, U.O.N. — LOWER CASE SUBSCRIPT INDICATES CONTROLLED SWITCHLEG OF CIRCUIT
D.T.	DENOTES DUST TIGHT CONSTRUCTION	$ 2	TWO POLE AC SNAP SWITCH @ +48" TO TOP OF BOX, U.O.N.
O.C.	DENOTES SPACING DIMENSION ON CENTER LINE OF DEVICE	$ 3	THREE WAY AC SNAP SWITCH @ +48" TO TOP OF BOX, U.O.N.
R.T.	DENOTES RAIN TIGHT CONSTRUCTION	$ 4	FOUR WAY AC SNAP SWITCH @ +48" TO TOP OF BOX, U.O.N.
U.G.	DENOTES UNDERGROUND INSTALLATION	$ M	HORSEPOWER RATED AC SNAP SWITCH @ +48" TO TOP OF BOX U.O.N.
V.P.	DENOTES VAPOR TIGHT CONSTRUCTION	$ P	SINGLE POLE AC SNAP SWITCH WITH PILOT LAMP @ +48" TO TOP OF BOX U.O.N.
W.P.	DENOTES WEATHERPROOF CONSTRUCTION	$ T	DIGITAL TIMER SWITCH, FLUSH MOUNTED @ +48" TO TOP OF BOX U.O.N.
W.T.	DENOTES WATER TIGHT CONSTRUCTION	$ A	SINGLE POLE AC SNAP SWITCH @ +48" TO TOP OF BOX, U.O.N.
A.F.F.	DENOTES ABOVE FINISHED FLOOR	$ K	KEY OPERATED AC SNAP SWITCH @ +48" TO TOP OF BOX U.O.N.
A.F.G.	DENOTES ABOVE FINISHED GRADE	[$]	WALL SWITCH WITH INTEGRAL OCCUPANCY SENSOR @ +48" TO TOP OF BOX, U.O.N.
F.B.O.	DENOTES FURNISHED BY OTHERS	M	OCCUPANCY SENSOR - CEILING MOUNTED
U.O.N.	DENOTES UNLESS OTHERWISE NOTED	M W	OCCUPANCY SENSOR - WALL MOUNTED @ +90" TO TOP OF BOX, U.O.N.
(E)	DENOTES EXISTING TO REMAIN, NO WORK U.O.N.	P	LIGHTING CONTROL SYSTEM DIMMING/POWER PACK MOUNTED IN ATTIC
(N)	DENOTES NEW	RP	LIGHTING CONTROL SYSTEM PLUG LOAD RELAY PACK MOUNTED IN ATTIC
(1)	ELECTRICAL KEYNOTES: DENOTES KEYNOTE #1 OF NOTES ON SAME SHEET	C1	LIGHTING CONTROL SYSTEM 2-BUTTON DIMMING WALL SWITCH @ +48" TO TOP OF BOX, U.O.N.
A-3	CIRCUIT HOME RUN: DENOTES PANEL A, CKT. #3, - 3/4"C. MINIMUM, U.O.N.	C4	LIGHTING CONTROL SYSTEM 4-BUTTON DIMMING WALL SWITCH @ +48" TO TOP OF BOX, U.O.N.
1	CIRCUIT FEEDER: DENOTES FEEDER 'F1' PER SYSTEM FEEDER SCHEDULE	C1 L	LIGHTING CONTROL SYSTEM DIMMING WALL SWITCH WITH LOCKING COVER @ +48" TO TOP OF BOX, U.O.N.
	CONDUIT IN ATTIC/WALL: DENOTES 3/4"C-2#12 AWG CU THWN, 1#12 CU GND, U.O.N.	DS	LIGHTING CONTROL SYSTEM DAYLIGHT SENSOR - CEILING MOUNTED
	CONDUIT IN FLOOR/U.G.: DENOTES 3/4"C-2#12 AWG CU THWN, 1#12 CU GND, U.O.N.	nB	LIGHTING CONTROL SYSTEM NETWORK BRIDGE
	DENOTES EXISTING CONDUIT RUN TO REMAIN	nG	LIGHTING CONTROL SYSTEM NETWORK GATEWAY
	CONDUIT RUN - STUBBED, CAPPED AND LABELED.	AD	LIGHTING CONTROL SYSTEM AUTOMATED DEMAND RESPONSE MODULE
	CONDUIT RUN: DENOTES 3/4"C - 3 #12 AWG CU THWN + 1 #12 CU GND, U.O.N.	TC	LIGHTING CONTROL SYSTEM TIME CLOCK
	CONDUIT RUN: DENOTES 3/4"C - 4 #12 AWG CU THWN + 1 #12 CU GND, U.O.N.	PC	PHOTOCELL CONTROL MOUNTED ON ROOF
	CONDUIT RUN: DENOTES 3/4"C - 5 #12 AWG CU THWN + 1 #12 CU GND, U.O.N.	T	LOW VOLTAGE CONTROL TRANSFORMER
	CONDUIT RUN: DENOTES 1"C - 6 #12 AWG CU THWN + 1 #12 CU GND, U.O.N.		
	SEPARATE POWER AND DATA FLOOR BOXES (2)		ELECTRICAL PANELBOARD PER PLANS, FLUSH MOUNTED IN WALL (4)
	FLUSH FLOOR BOX WITH DEVICE(S) INSTALLED PER PLANS, U.O.N. (2)		ELECTRICAL PANELBOARD PER PLANS, SURFACE MOUNTED ON WALL
	TAMPER-RESISTANT SINGLE RECEPTACLE IN WALL @ +18", U.O.N.		TERMINAL CABINET PER PLANS, FLUSH MOUNTED IN WALL (5)
	TAMPER-RESISTANT DUPLEX RECEPTACLE IN WALL @ +18", U.O.N.		TERMINAL CABINET PER PLANS, SURFACE MOUNTED ON WALL
	TAMPER-RESISTANT DUPLEX GFI RECEPTACLE, IN WALL @ 18", U.O.N.		LIGHTING CONTROL PANEL PER PLANS, FLUSH MOUNTED IN WALL (5)
	TAMPER-RESISTANT SWITCHED GFCI RECEPTACLE IN WALL @ +18" A.F.F. U.O.N. (OCC. SENSOR OR WALL SWITCH CONTOLLED)		LIGHTING CONTROL PANEL PER PLANS, SURFACE MOUNTED ON WALL
WP	TAMPER-RESISTANT WEATHER RESISTANT (W/R) DUPLEX GFCI RECEPTACLE W/ W.P. COVER @+18", U.O.N.		FIRE ALARM PANEL PER PLANS, FLUSH MOUNTED IN WALL (5)
	TAMPER-RESISTANT DUPLEX ISOLATED GROUND RECEPTACLE IN WALL @ +18", U.O.N. (7)		FIRE ALARM PANEL PER PLANS, SURFACE MOUNTED ON WALL
	TAMPER-RESISTANT QUADRUPLEX RECEPTACLE IN WALL @ +18", U.O.N.		
	SPECIAL PURPOSE ELECTRICAL OUTLET PER PLAN IN WALL @ 18" U.O.N.	S WP	EXTERIOR SPEAKER (WALL MOUNTED), ELEVATION AS NOTED
	DUPLEX RECEPTACLE FLUSH IN CEILING	S	SPEAKER IN CEILING, U.O.N.
	TAMPER-RESISTANT QUADRUPLEX RECEPTACLE IN WALL @ +18" A.F.F., U.O.N. ONE UNSWITCHED RECEPTACLE AND ONE SWITCHED (OCC. SENSOR CONTROLLED) RECEPTACLE	S	SPEAKER/CLOCK IN COMMON BACKBOX PER PLAN @ 12" BELOW CEILING, U.O.N.
J	JUNCTION BOX		WALL CLOCK PER PLAN @ 12" BELOW CEILING, U.O.N.
J	JUNCTION BOX WITH FLEXIBLE CONDUIT CONNECTION TO EQUIPMENT	S	SPEAKER ON WALL @ 12" BELOW CEILING, U.O.N. (3)
	NON-FUSIBLE DISCONNECT SWITCH	MD	INTRUSION ALARM SYSTEM MOTION DETECTOR (WALL MOUNTED) (3)
	FUSIBLE DISCONNECT SWITCH	DC	INTRUSION ALARM SYSTEM MAGNETIC DOOR CONTACT (3)
	FUSIBLE DISCONNECT SWITCH WITH INTEGRAL MAGNETIC STARTER	WC	INTRUSION ALARM SYSTEM MAGNETIC WINDOW CONTACT (3)
	ELECTRIC MOTOR	GB	INTRUSION ALARM SYSTEM GLASS BREAK DETECTOR (3)
	EXHAUST FAN OR FRACTIONAL HORSEPOWER MOTOR	KP	INTRUSION ALARM SYSTEM KEYPAD (WALL MOUNTED) (3)
	SURFACE MOUNTED RACEWAY, MOUNT @ +18" A.F.F. U.ON.	CR	INTRUSION ALARM SYSTEM CARD READER (WALL MOUNTED) (3)
	RECESSED LED LIGHTING FIXTURE	FR	INTRUSION ALARM SYSTEM FOB READER (WALL MOUNTED) (3)
	RECESSED LED LIGHTING FIXTURE WITH EMERGENCY BATTERY BACKUP	SC	SECURITY CAMERA (WALL MOUNTED) ROUGH-IN LOCATION PER PLAN (3)
	SURFACE MOUNTED LED LIGHTING FIXTURE		
	SURFACE MOUNTED LED LIGHTING FIXTURE WITH EMERGENCY BATTERY BACKUP	SD	FIRE ALARM SMOKE DETECTOR ON CEILING, U.O.N.
	SURFACE MOUNTED LED STRIP LIGHT	HD	FIRE ALARM HEAT DETECTOR ON CEILING, U.O.N.
	SURFACE MOUNTED LED STRIP LIGHT WITH EMERGENCY BATTERY BACKUP	HD A	FIRE ALARM HEAT DETECTOR IN ATTIC U.O.N.
	POST TOP MOUNTED LIGHTING FIXTURE	DD	FIRE ALARM DUCT DETECTOR IN HVAC DUCT
	WALL MOUNTED LIGHTING FIXTURE	DR	FIRE ALARM DOOR RELEASE
	WALL MOUNTED LIGHTING FIXTURE WITH EMERGENCY BATTERY BACKUP	CR	FIRE ALARM ADDRESSABLE CONTROL RELAY MODULE
	CEILING MOUNTED LIGHTING FIXTURE	CS	FIRE ALARM ADDRESSABLE INPUT/OUTPUT MODULE
	CEILING MOUNTED LIGHTING FIXTURE WITH EMERGENCY BATTERY BACKUP	AM	FIRE ALARM INDIVIDUAL ADDRESSABLE MODULE
	RECESSED LIGHTING FIXTURE	SM	FIRE ALARM SYNC MODULE
	RECESSED FIXTURE WITH EMERGENCY BATTERY BACKUP	F	FIRE ALARM MANUAL PULL STATION @ +48" TO TOP OF BOX, U.O.N.
	SURFACE MOUNTED ROUND LIGHTING FIXTURE	WF	FIRE ALARM WATERFLOW DETECTION SWITCH
	SURFACE MOUNTED ROUND LIGHTING FIXTURE WITH EMERGENCY BATTERY BACKUP	WT	FIRE ALARM ADDRESSABLE WATERFLOW / TAMPER SWITCH MODULE
	ILLUMINATED EXIT SIGN MOUNTED ON CEILING	TS	FIRE ALARM TAMPER SWITCH
	ILLUMINATED EXIT SIGN MOUNTED ON WALL	V	FIRE ALARM VISUAL ALARM UNIT (WALL@ +80" MINIMUM, U.O.N.)
	LOW LEVEL PHOTOLUMINESCENT EXIT SIGN MOUNTED ON WALL	V	FIRE ALARM VISUAL ALARM UNIT (CEILING)
	POLE MOUNTED EXTERIOR LIGHTING FIXTURE	AV	FIRE ALARM HORN/STROBE ALARM UNIT (WALL @ +80" MINIMUM, U.O.N.)
		AV	FIRE ALARM VISUAL ALARM UNIT (CEILING)
2/2	COMBINATION VOICE AND DATA OUTLET IN WALL, WITH TWO 'D' CABLES TO IDF + TWO 'T' CABLES TO TELEPHONE BACKBOARD. (1) (6)	H	INTERIOR FIRE ALARM HORN (WALL @ +10'-0", U.O.N.)
X	DATA OUTLET IN WALL @ +18", U.O.N., WITH 'D' CABLES TO IDF OR MDF (SUBSCRIPT INDICATES QUANTITY OF CABLES AND STATION SIDE JACKS) (1) (6)	H	EXTERIOR FIRE ALARM HORN (EXTERIOR WALL)
TV	TELEVISION OUTLET IN WALL @ +18", U.O.N. (1)	SV	VOICE EVACUATION SPEAKER/STROBE ALARM UNIT (WALL @ +80" MINIMUM, U.O.N.)
M	MICROPHONE OUTLET IN WALL @ +18", U.O.N. (1)	SV	VOICE EVACUATION SPEAKER/STROBE ALARM UNIT (CEILING)
S	SPEAKER OUTLET IN WALL @ +18", U.O.N. (1)	S	EXTERIOR VOICE EVACUATION SPEAKER (EXTERIOR WALL)
IC	INTERCOMMUNICATIONS HANDSET ON WALL @ +48" TO TOP OF BOX U.O.N.		FIRE ALARM CIRCUIT END OF LINE RESISTOR
WAP	WIRELESS ACCESS POINT LOCATION, PROVIDE TWO TYPE 'D' CABLES TO IDF OR MDF		

ELECTRICAL SYMBOLS NOTES:

(1) RUN 1"C CONCEALED IN WALL AND STUB INTO ACCESSIBLE ATTIC SPACE ABOVE NEAREST T-BAR CEILING, U.O.N.

(2) RUN 1"C TO NEAREST WALL, THEN RISE CONCEALED IN WALL AND STUB INTO ACCESSIBLE ATTIC SPACE ABOVE NEAREST T-BAR CEILING, U.O.N. FOR SINGLE SYSTEMS INDIVIDUAL FLOORBOXES. WHERE MULTIPLE SYSTEMS OCCUR WITHIN A COMMON FLOOR BOX, RUN TWO 1"C PER ABOVE.

(3) SYSTEM IS ROUGH IN ONLY, PROVIDE BACKBOX, BLANK COVERPLATE AND CONDUIT STUB PER DETAIL PLANS.

(4) IN ADDITION TO CONDUITS SHOWN ON PLANS, STUB ONE 1 1/4"C, ONE 1"C, AND TWO 3/4"C (SPARE) INTO ACCESSIBLE ATTIC SPACE ABOVE NEAREST T-BAR CEILING, U.O.N. THIS REQUIREMENT APPLIES TO EACH POWER AND LIGHTING PANEL INDICATED FLUSH MOUNTED ON POWER PLAN.

(5) IN ADDITION TO CONDUITS SHOWN ON PLANS, STUB ONE 1"C AND TWO 3/4"C (SPARE) INTO ACCESSIBLE ATTIC SPACE ABOVE NEAREST T-BAR CEILING U.O.N.. REQUIREMENT APPLIES TO EACH SIGNAL SYSTEM T.C. INDICATED FLUSH MOUNTED ON SIGNAL PLAN.

(6) 4S BACKBOX WITH SINGLE GANG TRIM AND COVERPLATE.

(7) ORANGE DEVICE (ISOLATED GROUND DUPLEX RECEPT. ONLY) WITH ENGRAVED WORDING ON COVER PLATE ABOVE ISOLATED GROUND RECEPT.: "COMPUTER ONLY".

SYMBOL LEGEND AND NOTES N.T.S. 4

Teter, Inc. expressly reserves its common law copyright and other property rights in these plans. This document, the ideas and designs incorporated herein, as an instrument of professional service, is not to be used in whole or in part, for any other project without prior written authorization.

MARK	DATE	DESCRIPTION
1	4.22.25	ADDENDUM 05 - FIRE ALARM REV
B	11/19/24	DSA BACKCHECK

REGISTERED PROFESSIONAL ENGINEER JASON MARCH No. E 24293 12-31-2? ELECTRICAL STATE OF CALIFORNIA

TETER, INC.
FRESNO HEADQUARTERS
VISALIA | BAKERSFIELD | MODESTO | SAN LUIS OBISPO
ARCHITECTS ENGINEERS CONNECTED
TETER

STOCKTON UNIFIED SCHOOL DISTRICT
ROOSEVELT E.S. ELOP
776 S. BROADWAY AVE.
STOCKTON, CA

DRAWING TITLE
ELECTRICAL SCHEDULES, LEGENDS, AND NOTES

PROJECT NO.
23-12907.00

DRAWING
E800

AD5-ROO-E04

FIRE ALARM SYSTEM DESCRIPTION

THE FIRE ALARM SYSTEM DESCRIBED BY THESE DRAWINGS AND ASSOCIATED SPECIFICATIONS IS A MANUAL AND AUTOMATIC SYSTEM. THIS SYSTEM UTILIZES SMOKE DETECTORS ON CEILINGS AND IN THE ROOMS HOUSING THE FIRE ALARM SYSTEM EQUIPMENT, WITH HEAT DETECTORS INSTALLED IN ATTICS. THE SYSTEM IS ADDRESSABLE AND IS WIRED CLASS 'B' WITHIN THE BUILDINGS AND CLASS 'B' BETWEEN BUILDINGS.

FIRE ALARM APPROVAL

THE FIRE ALARM SYSTEM DESIGN IS A "COMPLETE PLAN SUBMITTAL" PER DSA FIRE ALARM SUBMITTAL GUIDELINES. THE CONTRACTOR SHALL INSTALL THE SYSTEM AS SHOWN AND AS HEREIN SPECIFIED. IF ANY SUBSTITUTION OF FIRE ALARM EQUIPMENT IS TO BE REQUESTED, SUCH REQUEST SHALL BE MADE A MINIMUM OF TWO WEEKS PRIOR TO PROJECT BID DATE. THE CONTRACTOR SHALL BE RESPONSIBLE FOR SUBMITTING THE SUBSTITUTION PER THE DSA GUIDELINES AND SHALL PAY ALL ADDITIONAL COSTS REQUIRED TO ACCOMMODATE REVIEW OF THE SUBSTITUTED FIRE ALARM SYSTEM BY DSA, WHETHER OR NOT SUCH APPROVAL IS GIVEN. THE CONTRACTOR'S SUBMITTAL SHALL INCLUDE MANUFACTURER'S CATALOG CUT SHEETS AND CSFM LISTING SHEETS FOR THE INDIVIDUAL COMPONENTS COMPRISING THE SUBSTITUTED FIRE ALARM SYSTEM, BATTERY LOAD CALCULATIONS AND VOLTAGE DROP CALCULATIONS FOR EACH SIGNALING CIRCUIT.

APPLICABLE CODES AND STANDARDS

2022 CA BUILDING CODE - CCR, TITLE 24, PART 2, VOLUMES 1 & 2
(2021 IBC AND CALIFORNIA AMENDMENTS)
2022 CA ELECTRICAL CODE - CCR, TITLE 24, PART 3
(2020 NEC AND CALIFORNIA AMENDMENTS)
2022 CA MECHANICAL CODE - CCR, TITLE 24, PART 4
(2021 UMC AND CALIFORNIA AMENDMENTS)
2022 CA PLUMBING CODE - CCR, TITLE 24, PART 5
(2021 UPC AND CALIFORNIA AMENDMENTS)
2022 CA FIRE CODE - CCR, TITLE 24, PART 9
(2021 IFC AND CALIFORNIA AMENDMENTS)
2022 CA REFERENCE STANDARDS CODE - CCR, TITLE 24, PART 12
2022 NFPA 13, INSTALLATION OF SPRINKLER SYSTEMS AND 2022 CALIFORNIA AMENDMENTS
2022 NFPA 72, NATIONAL FIRE ALARM CODE, AND 2022 CALIFORNIA AMENDMENTS
PUBLIC SAFETY, STATE FIRE MARSHAL REGULATIONS - CCR, TITLE 19
DSA GUIDELINES FOR FIRE AND LIFE SAFETY SYSTEMS, DIVISION OF THE STATE ARCHITECT OFFICE OF REGULATION SERVICES.

FIRE ALARM GENERAL NOTES

1. UNDERGROUND AND EXTERIOR CONDUITS WILL HAVE WATERTIGHT FITTINGS. (CEC 110.11 AND CEC 300.6)
2. OUTLETS ON OPPOSITE SIDES OF A FIRE RATED WALL SHALL BE INSTALLED WITH A MINIMUM HORIZONTAL SPACING OF TWO FEET.
3. FIRE ALARM DEVICE MOUNTING HEIGHTS SHALL BE AS FOLLOWS:
   a. PULL STATION - OPERABLE PART OF A MANUALLY ACTUATED ALARM INITIATING DEVICE SHALL BE NOT LESS THAN 42" FROM FINISHED FLOOR; AND TOP OF BOX SHALL NOT BE MORE THAN 48" FROM FINISHED FLOOR. (CBC 11B 308.1.1, NFPA 72 17.14.5)
   b. INTERIOR AUDIBLE NOTIFICATION APPLIANCE - AT LEAST 90" TO THE TOP OF DEVICE ABOVE FINISHED FLOOR AND NOT LESS THAN 6" BELOW FINISHED CEILING. (NFPA 72 18.4.8.1)
   c. WALL-MOUNTED STROBE OR SPEAKER/STROBE - AT LEAST 80" TO BOTTOM OF LENS AND NOT GREATER THAN 96" TO TOP OF LENS ABOVE FINISHED FLOOR. (NFPA 72 18.5.5.1)
4. AUDIBLE SIGNAL DEVICES OF A FIRE ALARM SYSTEM INTENDED TO ALERT ALL OCCUPANTS SHALL BE SO LOCATED AND UNOBSTRUCTED AS TO CAUSE A LEVEL OF AUDIBILITY OF AT LEAST 15 dBA ABOVE AVERAGE AMBIENT SOUND LEVEL BUT NOT LESS THAN 75 dBA AT TEN FEET, OR MORE THAN 110 dBA IN TOTAL. (NFPA 72 18.4.3.1, 18.4.1.2 AND CFC 907.5.2.1.2)
5. AMBIENT NOISE LEVELS SHALL BE CONSTRUED TO MEAN THAT WHICH CAN NORMALLY BE EXPECTED TO EXIST WHEN THE FACILITY, BUILDING, ROOM OR AREA IS FUNCTIONING UNDER NORMAL OPERATIVE OR WORKING CONDITIONS. (CFC 907.5.2.1.1)
6. AUDIBLE DEVICES SHALL SOUND THE CA UNIFORM FIRE ALARM SIGNAL IN TEMPORAL MODE. PROVIDE AT LEAST ONE EXTERIOR AUDIBLE DEVICE ON BUILDING FOR E OCCUPANCIES. (CFC 907.5.2.1.3)
7. EMERGENCY VOICE/ALARM COMMUNICATION SYSTEM SHALL COMPLY WITH CBC 907.2.3 AND NFPA 72 24.4.2
8. VISUAL DEVICES SHALL NOT EXCEED TWO FLASHES PER SECOND AND SHALL NOT BE SLOWER THAN ONE FLASH EVERY SECOND. (NFPA 72 18.5.3.1)
9. AUTOMATIC SMOKE DETECTION SHALL BE PROVIDED AT THE LOCATION OF EACH FIRE ALARM CONTROL UNIT, NOTIFICATION APPLIANCE CIRCUIT POWER EXTENDER AND SUPERVISING STATION TRANSMITTING EQUIPMENT TO PROVIDE NOTIFICATION OF FIRE AT THAT LOCATION. (NFPA 72 10.4.4)
10. BRANCH CIRCUITS PROTECTING FIRE ALARM EQUIPMENT SHALL BE LABELED PER NFPA 72 10.6.5.2.2 AND SHALL INCLUDE A LISTED CIRCUIT BREAKER LOCKING DEVICE PER NFPA 72 10.6.5.4
11. COMPLETE THE NFPA 72 RECORD OF COMPLETION, TESTING ALL DEVICES AND APPLIANCES. PROVIDE A COPY OF THE COMPLETED RECORD OF COMPLETION TO THE OWNER (SCHOOL DISTRICT), ARCHITECT, LOCAL FIRE AUTHORITY, AND DSA VIA THE PROJECT INSPECTOR. TESTING OF THE ENTIRE SYSTEM SHALL BE MADE IN THE PRESENCE OF THE LOCAL FIRE AUTHORITY AND THE DSA INSPECTOR OF RECORD (IOR). FINAL TEST SHALL INCLUDE READ OUT VERIFICATION FORM FROM CENTER STATION.
12. THE AUTOMATIC ALARM SYSTEM SHALL BE INSTALLED, TESTED, AND MAINTAINED IN ACCORDANCE WITH THE STATE FIRE MARSHAL'S REGULATIONS (CFC 907.8.5, NFPA 72 14.4.1.1, NFPA 72 14.5)

FIRE ALARM CODES AND NOTES N.T.S. 19

FIRE ALARM SYSTEM EQUIPMENT LEGEND

SYMBOL	DESCRIPTION
FACP	FIRE ALARM CONTROL PANEL 'FACP' EDWARDS EST4 SERIES W/AUTOMATIC CHARGING SYSTEM BACKBOX: EDWARDS #3-CAB14B & DOOR: EDWARDS #4-CAB24DR (DIMENSIONS: 37.75"H x 24.12"W x 3.86"D): PROCESSOR: EDWARDS #4-CPU LCD: EDWARDS #4-LCDAUDTEL AUDIO SOURCE UNIT: EDWARDS #4-AUDTELS 20W ZONE AMPLIFIER: EDWARDS #3-ZA20A 40W ZONE AMPLIFIER: EDWARDS #3-ZA40A NETWORK: 4-NET-AD WITH 4-NET-CAT DACT: EDWARDS #3-MODCOMP I/O: EDWARDS #3-IDC8/4 POWER SUPPLY: EDWARDS #4-PPS/M C.S.F.M. #7165-1657:0186
	NEW ADDRESSABLE SMOKE DETECTOR AND BASE (ON CEILING):
SD	EDWARDS #SIGA-OSD; C.S.F.M. #7272-1657:0511 EDWARDS #SIGA-SB; C.S.F.M. #7300-1657:0120
HD A	NEW ADDRESSABLE HEAT DETECTOR AND BASE (IN ATTIC): EDWARDS #SIGA-HRD; C.S.F.M. #7270-1657:0333 EDWARDS #SIGA-SB; C.S.F.M. #7300-1657:0120
SV XX	NEW SPEAKER/STROBE ANNUNCIATOR - WALL MOUNTED (XX REPRESENTS CANDELA) EDWARDS #G4SVRF; C.S.F.M. #7320-1657:0516
S WR	NEW VOICE EVACUATION SYSTEM SPEAKER (OUTDOOR - WEATHERPROOF) EDWARDS #WG4RF-S, WG4RTS C.S.F.M. #7225-1657:0285
4-ANN M	FIRE ALARM REMOTE ANNUNCIATOR EDWARDS EST4 SERIES BACKBOX: EDWARDS #4-4ANNMT (DIMENSIONS: 13.72"H x 12.73"W x 2.2"D): PROCESSOR: EDWARDS #4-ANNCPU AUDIO SOURCE EXPANDER: EDWARDS #4-ANNAUDTEL LCD: EDWARDS #4-LCDANN MICROPHONE: EDWARDS #4-LCDANN NETWORK: 4-NET-AD WITH 4-NET-CAT C.S.F.M. #7165-1657:0186

FIRE ALARM LEGEND N.T.S. 13

SB575 - GREEN OAKS FAMILY ACADEMY ELEMENTARY SCHOOL FIRE PROTECTION ACT REQUIREMENTS FOR AUTOMATIC FIRE ALARM SYSTEMS

THE FIRE DETECTION AND ALARM SYSTEM FOR THE AREAS AND/OR BUILDINGS WITHIN THE SCOPE OF WORK OF THIS PROJECT:

- [X] COMPLIES WITH SB575
  - [X] A FULLY-AUTOMATIC SYSTEM HAS BEEN DESIGNED FOR ALL AREAS, OR
  - [ ] THE AREAS AND/OR BUILDINGS ARE SPRINKLERED ABOVE THE CEILING, SO HEAT DETECTORS ARE EXEMPTED FROM ABOVE-CEILING AREAS. THE SYSTEM IS OTHERWISE FULLY AUTOMATIC.
  - [X] AN AUTOMATIC DIALER TO A UL-APPROVED CENTRAL STATION:
    - [X] IS EXISTING, OR
    - [ ] IS INCLUDED AS PART OF THIS PROJECT.
- [ ] IS EXEMPT FROM SB575
  - [ ] THE TOTAL PROJECT CONSTRUCTION VALUE IS LESS THAN $200,000, OR
  - [ ] THE PROJECT CONSISTS OF ONLY MODULAR BUILDINGS WHICH ARE TEMPORARY; THESE BUILDINGS SHALL BE REMOVED NO MORE THAN THREE YEARS FROM THE INSTALLATION DATE UNLESS A THREE-YEAR EXTENSION IS APPROVED BY DSA, OR
  - [ ] THE PROJECT IS NOT FUNDED UNDER CHAPTER 12.5 OF THE LEROY F. GREENE SCHOOL FACILITIES ACT. IT WILL BE 100% FUNDED BY LOCAL FUNDS.

SB575 N.T.S. 14

FIRE ALARM MONITORING NOTE

AUTOMATIC FIRE ALARM SYSTEMS SHALL TRANSMIT THE ALARM, SUPERVISORY AND TROUBLE SIGNALS TO AN APPROVED SUPERVISING STATION AS REQUIRED BY NFPA 72 AS AMENDED BY CFC CHAPTER 80. THE SUPERVISING STATION SHALL BE LISTED AS EITHER UUFX OR UUJS BY UNDERWRITERS LABORATORY OR SHALL MEET THE REQUIREMENTS OF FACTORY MUTUAL RESEARCH APPROVAL STANDARD 3011. SUPERVISION OF SYSTEM AND LEASED TELEPHONE LINES SHALL BE ARRANGED BY OWNER.

FIRE ALARM MONITORING NOTE N.T.S. 15

FIRE ALARM SYSTEM OPERATIONAL MATRIX

DEVICE	ACTIVATE EVACUATION SIGNALS/STROBES	SHUTDOWN FIRE/SMOKE DAMPER, OR ACTIVATE SMOKE VENT RELEASE	SHUTDOWN HVAC EQUIPMENT	ANNUNCIATE AT BUILDING FACP AND ALL REMOTE ANNUNCIATORS	SEND SIGNAL TO CENTRAL STATION
FIRE ALARM PANEL SYSTEM TROUBLE				X	X
SMOKE DETECTOR	X	X		X	X
HEAT DETECTOR	X			X	X

FIRE ALARM OPERATIONAL MATRIX 16

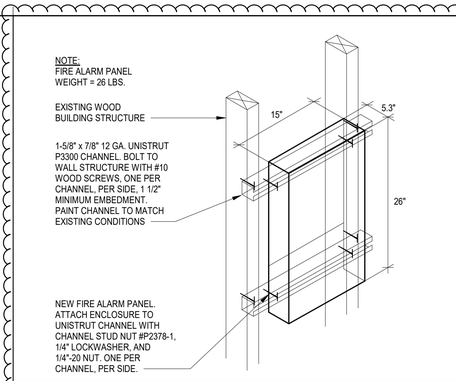

FIRE ALARM DEVICE ELEVATIONS N.T.S. 10

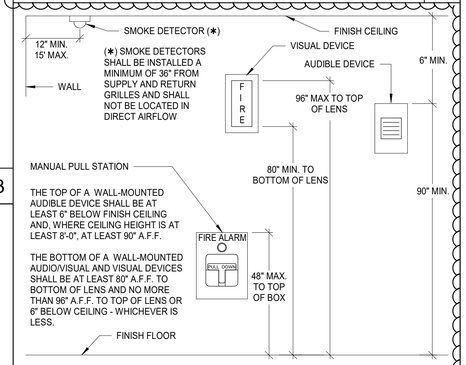

FIRE ALARM DEVICE ELEVATIONS N.T.S. 10

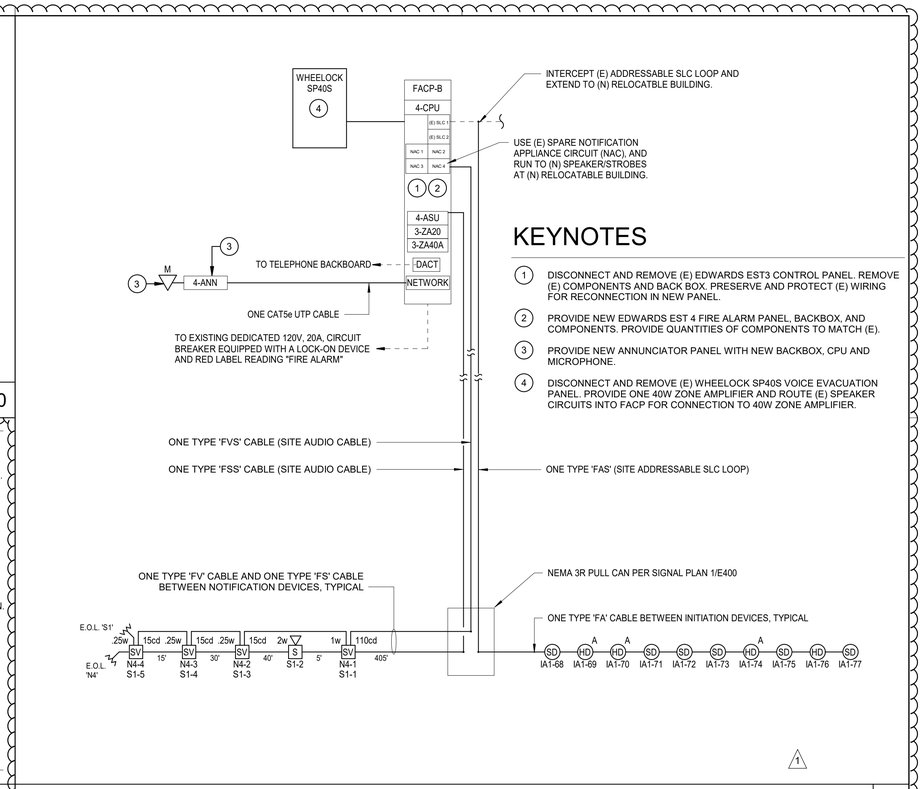

KEYNOTES

1. DISCONNECT AND REMOVE (E) EDWARDS EST3 CONTROL PANEL. REMOVE (E) COMPONENTS AND BACK BOX. PRESERVE AND PROTECT (E) WIRING FOR RECONNECTION IN NEW PANEL.
2. PROVIDE NEW EDWARDS EST 4 FIRE ALARM PANEL, BACKBOX, AND COMPONENTS. PROVIDE QUANTITIES OF COMPONENTS TO MATCH (E).
3. PROVIDE NEW ANNUNCIATOR PANEL WITH NEW BACKBOX, CPU AND MICROPHONE.
4. DISCONNECT AND REMOVE (E) WHEELOCK SP40S VOICE EVACUATION PANEL. PROVIDE ONE 40W ZONE AMPLIFIER AND ROUTE (E) SPEAKER CIRCUITS INTO FACP FOR CONNECTION TO 40W ZONE AMPLIFIER.

FIRE ALARM RISER DIAGRAM N.T.S. 2

FIRE ALARM CONTROL PANEL 'FACP-A' BATTERY CALCULATIONS

QTY.	DEVICE	DESCRIPTION	STANDBY CURRENT	ALARM CURRENT/ DEVICE	ALARM CURRENT
1	EST4	FIRE ALARM CONTROL PANEL	-----	-----	-----
1	4-PPS/M	Power Supply	-----	-----	-----
1	4-CPU	Central Processor	0.2300	0.2300	0.2300
1	3-SDDC2	Dual SIGA Controller (1)	0.2500	0.3500	0.3500
2	3-IDC8/4	Input Module	0.1060	0.3500	0.7000
1	3-ZA20x	20W Zone Amplifier	0.0620	1.1200	1.1200
1	4-LCD	MAIN COLOR TOUCHSCREEN LCD DISPLAY	0.0500	0.1100	0.1100
1	3-ZA40A	40W ZONE AMPLIFIER	0.0620	2.4800	2.4800
1	4-AUDTELS	AUDIO SOURCE UNIT	0.0850	0.1010	0.1010
1	4-NET-AD	NETWORK ADDER MODULE	0.0920	0.0920	0.0920
1	3-MODCOMP	DIGITAL COMMUNICATION MODULE	0.0600	0.0950	0.0950
1	ANNUNCIATOR	EST 4 SERIES ANNUNCIATOR WITH LCD AND MIC	0.1250	0.1250	0.1250
4		Horns	0.0000	0.0400	0.1600
13		Mini-Horns	0.0000	0.0100	0.1300
19		Strobes	0.0000	0.1250	2.3750
3	G4SVRF - 15cd	15cd Speaker/Strobe	0.0000	0.0280	0.0840
1	G4SVRF - 110cd	110cd Speaker/Strobe	0.0000	0.0280	0.0280
1	WG4RF-S/WG4RTS	Exterior WP Speaker	-----	-----	-----
		TOTALS	1.1220	5.2840	8.1800

TOTAL ALARM AMP-HOURS (15 MIN.) =	0.25	HR	x	8.180	A	=	2.0450	A-H
TOTAL STANDBY AMP-HOURS (24 HRS) =	24	HR	x	1.122	A	=	26.9280	A-H
TOTAL REQUIRED AMP-HOURS =						=	**28.9730**	**A-H**
TOTAL DESIGN AMP-HOURS WITH 25% SAFETY FACTOR =						=	**36.2163**	**A-H**
BATTERIES							**40.000**	**A-H**

FIRE ALARM CONTROL PANEL 'FACP-A' NOTES:

1) THE SIGA DEVICE CONTROLLER IS CALCUALTED WITH THE MAXIMUM SIGNATURE ADDRESSABLE DEVICE LOAD (TOTAL CAPACITY FOR ALL ADDRESSABLE DEVICES).

dB LINE LOSS CALCULATION

SPEAKER VOLTAGE = 70

SPEAKERS	DEVICE POWER (WATTS)	SIGNAL CKT S1 QTY.	SIGNAL CKT S1 WATTS	SIGNAL CKT S2 QTY.	SIGNAL CKT S2 WATTS	SPEAKER QTY TOTAL.	MIN. AMP SIZE (WATTS)
SPEAKER - 1/4 WATT TAP	0.25	3	0.75	0	0	3	4.5
SPEAKER - 1/2 WATT TAP	0.5	0	0	0	0	0	
SPEAKER - 1 WATT TAP	1	1	1	0	0	1	
SPEAKER - 2 WATT TAP	2	1	2	0	0	1	
TOTAL POWER ON CKT (P) WATTS		3.75		0			
LOAD RESISTANCE (LR) OHMS		1307		-			
TOTAL WIRE LENGTH (D) FT		495		0			
WIRE SIZE		14 AWG		14 AWG			
TOTAL WIRE RESISTANCE (WR) OHMS		3.2274		-			
POWER LOSS (PL) dB		**-0.02**		-			

FORMULAS

WIRE RESISTANCE (R) (OHMS/Kft)*

18 AWG	=	8.08
16 AWG	=	5.08
14 AWG	=	3.26
12 AWG	=	2.05

*VALUES PER NFPA 70

TOTAL WIRE RESISTANCE (WR) = (R / 1000) * D

LOAD RESISTANCE (LR) = (SPEAKER VOLTAGE)^2 / P

POWER LINE LOSS (PL) = 10 * LOG (1- (WR / (WR+LR) ...

NAC 'N4' VOLTAGE DROP CALCULATION

QTY.	DEVICE	DESCRIPTION	ALARM CURRENT/ DEVICE	TOTAL ALARM CURRENT
3	SV15	Multi-Candela Speaker Strobe (15cd) Edwards #G4SVRF	0.0280	0.0840
1	SV110	Multi-Candela Speaker Strobe (110cd) Edwards #G4SVRF	0.0280	0.0280
		TOTAL CURRENT ADDED TO CIRCUIT	0.000	0.112

LENGTH OF WIRE FROM FACP TO LAST DEVICE (IN FEET) =	**495**
ACTUAL SIZE OF WIRE INSTALLED = **12** AWG **6530** CIRCULAR MILS	
CALCULATED VOLTAGE DROP (IN VDC) =	**0.183**
CIRCUIT VOLTAGE CALCULATED AT LAST DEVICE (IN VDC) =	**23.8 VDC**
PERCENT VOLTAGE DROP (%) =	**0.76 %**

VOLTAGE DROP FORMULA:
VOLTAGE DROP = 2 X 10.8 x LENGTH OF CIRCUIT TO FARTHEST DEVICE x CURRENT / WIRE SIZE IN C.M.
COMPUTED WITH TOTAL CURRENT ON CIRCUIT AT MAXIMUM LENGTH (CLASS A CIRCUIT).

BATTERY AND VOLTAGE DROP CALCULATIONS N.T.S. 4

Teter, Inc. expressly reserves its common law copyright and other property rights in these plans. This document, the ideas and designs incorporated herein, as an instrument of professional service, is not to be used in whole or in part, for any other project without prior written authorization.

MARK	DATE	DESCRIPTION
1	4.22.25	ADDENDUM 05 - FIRE ALARM REV
B	11/15/24	DSA BACHCHECK

TETER, INC.
FRESNO HEADQUARTERS
VISALIA | BAKERSFIELD | MODESTO | SAN LUIS OBISPO
ARCHITECTS ENGINEERS CONNECTED

ELOP RELOCATABLE CLASSROOM
RIO CALAVERAS E. S.
1819 E. BIANCHI RD.
STOCKTON, CA

DRAWING TITLE
FIRE ALARM RISER DIAGRAM & CALCULATIONS

PROJECT NO.
23-12909.00

DRAWING
E710

AD5-RIO-E05

PLOT DATE: 4/22/2025 7:14:46 PM

\\tetr-file1\Users\lesly.macias_TETR\Documents\12909-E-RIO CALAVERAS ELEM ELOP_lesly.maciasTBNP5.rvt

FIRE ALARM SYSTEM DESCRIPTION

THE FIRE ALARM SYSTEM DESCRIBED BY THESE DRAWINGS AND ASSOCIATED SPECIFICATIONS IS A MANUAL AND AUTOMATIC SYSTEM. THIS SYSTEM UTILIZES SMOKE DETECTORS ON CEILINGS AND IN THE ROOMS HOUSING THE FIRE ALARM SYSTEM EQUIPMENT, WITH HEAT DETECTORS INSTALLED IN ATTICS. THE SYSTEM IS ADDRESSABLE AND IS WIRED CLASS 'B' WITHIN THE BUILDINGS AND CLASS 'B' BETWEEN BUILDINGS.

FIRE ALARM APPROVAL

THE FIRE ALARM SYSTEM DESIGN IS A "COMPLETE PLAN SUBMITTAL" PER DSA FIRE ALARM SUBMITTAL GUIDELINES. THE CONTRACTOR SHALL INSTALL THE SYSTEM AS SHOWN AND AS HEREIN SPECIFIED. IF ANY SUBSTITUTION OF FIRE ALARM EQUIPMENT IS TO BE REQUESTED, SUCH REQUEST SHALL BE MADE A MINIMUM OF TWO WEEKS PRIOR TO PROJECT BID DATE. THE CONTRACTOR SHALL BE RESPONSIBLE FOR SUBMITTING THE SUBSTITUTION PER THE DSA GUIDELINES AND SHALL PAY ALL ADDITIONAL COSTS REQUIRED TO ACCOMMODATE REVIEW OF THE SUBSTITUTED FIRE ALARM SYSTEM BY DSA, WHETHER OR NOT SUCH APPROVAL IS GIVEN. THE CONTRACTOR'S SUBMITTAL SHALL INCLUDE MANUFACTURER'S CATALOG CUT SHEETS AND CSFM LISTING SHEETS FOR THE INDIVIDUAL COMPONENTS COMPRISING THE SUBSTITUTED FIRE ALARM SYSTEM, BATTERY LOAD CALCULATIONS AND VOLTAGE DROP CALCULATIONS FOR EACH SIGNALING CIRCUIT.

APPLICABLE CODES AND STANDARDS

2022 CA BUILDING CODE - CCR, TITLE 24, PART 2, VOLUMES 1 & 2
(2021 IBC AND CALIFORNIA AMENDMENTS)
2022 CA ELECTRICAL CODE - CCR, TITLE 24, PART 3
(2020 NEC AND CALIFORNIA AMENDMENTS)
2022 CA MECHANICAL CODE - CCR, TITLE 24, PART 4
(2021 UMC AND CALIFORNIA AMENDMENTS)
2022 CA PLUMBING CODE - CCR, TITLE 24, PART 5
(2021 UPC AND CALIFORNIA AMENDMENTS)
2022 CA FIRE CODE - CCR, TITLE 24, PART 9
(2021 IFC AND CALIFORNIA AMENDMENTS)
2022 CA REFERENCE STANDARDS CODE - CCR, TITLE 24, PART 12
2022 NFPA 13, INSTALLATION OF SPRINKLER SYSTEMS AND 2022 CALIFORNIA AMENDMENTS
2022 NFPA 72, NATIONAL FIRE ALARM CODE, AND 2022 CALIFORNIA AMENDMENTS
PUBLIC SAFETY, STATE FIRE MARSHAL REGULATIONS - CCR, TITLE 19
DSA GUIDELINES FOR FIRE AND LIFE SAFETY SYSTEMS, DIVISION OF THE STATE ARCHITECT OFFICE OF REGULATION SERVICES.

FIRE ALARM GENERAL NOTES

1. UNDERGROUND AND EXTERIOR CONDUITS WILL HAVE WATERTIGHT FITTINGS. (CEC 110.11 AND CEC 300.6)
2. OUTLETS ON OPPOSITE SIDES OF A FIRE RATED WALL SHALL BE INSTALLED WITH A MINIMUM HORIZONTAL SPACING OF TWO FEET.
3. FIRE ALARM DEVICE MOUNTING HEIGHTS SHALL BE AS FOLLOWS:
   a. PULL STATION - OPERABLE PART OF A MANUALLY ACTUATED ALARM INITIATING DEVICE SHALL BE NOT LESS THAN 42" FROM FINISHED FLOOR; AND TOP OF BOX SHALL NOT BE MORE THAN 48" FROM FINISHED FLOOR. (CBC 11B 308.1.1, NFPA 72 17.14.5)
   b. INTERIOR AUDIBLE NOTIFICATION APPLIANCE - AT LEAST 90" TO THE TOP OF DEVICE ABOVE FINISHED FLOOR AND NOT LESS THAN 6" BELOW FINISHED CEILING. (NFPA 72 18.4.8.1)
   c. WALL-MOUNTED STROBE OR SPEAKER/STROBE - AT LEAST 80" TO BOTTOM OF LENS AND NOT GREATER THAN 96" TO TOP OF LENS ABOVE FINISHED FLOOR. (NFPA 72 18.5.5.1)
4. AUDIBLE SIGNAL DEVICES OF A FIRE ALARM SYSTEM INTENDED TO ALERT ALL OCCUPANTS SHALL BE SO LOCATED AND UNOBSTRUCTED AS TO CAUSE A LEVEL OF AUDIBILITY OF AT LEAST 15 dBA ABOVE AVERAGE AMBIENT SOUND LEVEL BUT NOT LESS THAN 75 dBA AT TEN FEET, OR MORE THAN 110 dBA IN TOTAL. (NFPA 72 18.4.3.1, 18.4.1.2 AND CFC 907.5.2.1.2)
5. AMBIENT NOISE LEVELS SHALL BE CONSTRUED TO MEAN THAT WHICH CAN NORMALLY BE EXPECTED TO EXIST WHEN THE FACILITY, BUILDING, ROOM OR AREA IS FUNCTIONING UNDER NORMAL OPERATIVE OR WORKING CONDITIONS. (CFC 907.5.2.1.1)
6. AUDIBLE DEVICES SHALL SOUND THE CA UNIFORM FIRE ALARM SIGNAL IN TEMPORAL MODE. PROVIDE AT LEAST ONE EXTERIOR AUDIBLE DEVICE ON BUILDING FOR E OCCUPANCIES. (CFC 907.5.2.1.3)
7. EMERGENCY VOICE/ALARM COMMUNICATION SYSTEM SHALL COMPLY WITH CBC 907.2.3 AND NFPA 72 24.4.2
8. VISUAL DEVICES SHALL NOT EXCEED TWO FLASHES PER SECOND AND SHALL NOT BE SLOWER THAN ONE FLASH EVERY SECOND. (NFPA 72 18.5.3.1)
9. AUTOMATIC SMOKE DETECTION SHALL BE PROVIDED AT THE LOCATION OF EACH FIRE ALARM CONTROL UNIT, NOTIFICATION APPLIANCE CIRCUIT POWER EXTENDER AND SUPERVISING STATION TRANSMITTING EQUIPMENT TO PROVIDE NOTIFICATION OF FIRE AT THAT LOCATION. (NFPA 72 10.4.4)
10. BRANCH CIRCUITS PROTECTING FIRE ALARM EQUIPMENT SHALL BE LABELED PER NFPA 72 10.6.5.2.2 AND SHALL INCLUDE A LISTED CIRCUIT BREAKER LOCKING DEVICE PER NFPA 72 10.6.5.4
11. COMPLETE THE NFPA 72 RECORD OF COMPLETION, TESTING ALL DEVICES AND APPLIANCES. PROVIDE A COPY OF THE COMPLETED RECORD OF COMPLETION TO THE OWNER (SCHOOL DISTRICT), ARCHITECT, LOCAL FIRE AUTHORITY, AND DSA VIA THE PROJECT INSPECTOR. TESTING OF THE ENTIRE SYSTEM SHALL BE MADE IN THE PRESENCE OF THE LOCAL FIRE AUTHORITY AND THE DSA INSPECTOR OF RECORD (IOR). FINAL TEST SHALL INCLUDE READ OUT VERIFICATION FORM FROM CENTER STATION.
12. THE AUTOMATIC ALARM SYSTEM SHALL BE INSTALLED, TESTED, AND MAINTAINED IN ACCORDANCE WITH THE STATE FIRE MARSHAL'S REGULATIONS (CFC 907.8.5, NFPA 72 14.4.1.1, NFPA 72 14.5)

FIRE ALARM CODES AND NOTES N.T.S. 19

FIRE ALARM SYSTEM EQUIPMENT LEGEND

SYMBOL	DESCRIPTION
FACP	FIRE ALARM CONTROL PANEL 'FACP' EDWARDS EST4 SERIES W/AUTOMATIC CHARGING SYSTEM (E) BACKBOX: EDWARDS #3-CAB14B (DIMENSIONS: 37.75"H x 24.12"W x 3.86"D): PROCESSOR: EDWARDS #4-CPU LCD: EDWARDS #4-LCDAUDTEL AUDIO SOURCE UNIT: EDWARDS #4-AUDTELS 20W ZONE AMPLIFIER: EDWARDS #3-ZA20A NETWORK: 4-NET-AD WITH 4-NET-MM DACT: EDWARDS #3-MODCOMP I/O: EDWARDS #3-IDC8/4 POWER SUPPLY: EDWARDS #4-PPS/M C.S.F.M. #7165-1657:0186
4-ANN, M	FIRE ALARM REMOTE ANNUNCIATOR EDWARDS EST4 SERIES BACKBOX: EDWARDS #4-4ANNMT (DIMENSIONS: 13.72"H x 12.73"W x 2.2"D): PROCESSOR: EDWARDS #4-ANNCPU AUDIO SOURCE EXPANDER: EDWARDS #4-ANNAUDTEL LCD: EDWARDS #4-LCDANN MICROPHONE: EDWARDS #4-MIC NETWORK: 4-NET-AD WITH 4-NET-MM C.S.F.M. #7165-1657:0186
(N) APS	NEW FIRE ALARM AUXILIARY POWER SUPPLY 'APS' WITH AUTOMATIC CHARGING SYSTEM, AND INTEGRAL AUDIO AMPLIFIER : EDWARDS #APS-10A, C.S.F.M. #7300-1657:0229 EDWARDS #SIGA-AA50, C.S.F.M. #7300-1657:0121
CS	NEW ADDRESSABLE SYNCRONIZATION OUTPUT MODULE : EDWARDS #SIGA-CC1S, C.S.F.M.#7300-1657:0121 (MOUNT INSIDE NEW FIRE ALARM AUXILIARY POWER SUPPLY 'APS')
SD	NEW ADDRESSABLE SMOKE DETECTOR AND BASE (ON CEILING): EDWARDS #SIGA-OSD; C.S.F.M. #7272-1657:0511 EDWARDS #SIGA-SB; C.S.F.M. #7300-1657:0120
HD	NEW ADDRESSABLE HEAT DETECTOR AND BASE (ON CEILING): EDWARDS #SIGA-HRD; C.S.F.M. #7270-1657:0333 EDWARDS #SIGA-SB; C.S.F.M. #7300-1657:0120
HD A	NEW ADDRESSABLE HEAT DETECTOR AND BASE (IN ATTIC): EDWARDS #SIGA-HRD; C.S.F.M. #7270-1657:0333 EDWARDS #SIGA-SB; C.S.F.M. #7300-1657:0120
SV XX	NEW SPEAKER/STROBE ANNUNCIATOR - WALL MOUNTED (XX REPRESENTS CANDELA) EDWARDS #G4SVRF; C.S.F.M. #7320-1657:0516
S WP	NEW VOICE EVACUATION SYSTEM SPEAKER (OUTDOOR - WEATHERPROOF) EDWARDS #WG4RF-S, WG4RTS C.S.F.M. #7320-1657:0289

FIRE ALARM LEGEND N.T.S. 13

SB575 - GREEN OAKS FAMILY ACADEMY ELEMENTARY SCHOOL FIRE PROTECTION ACT REQUIREMENTS FOR AUTOMATIC FIRE ALARM SYSTEMS

THE FIRE DETECTION AND ALARM SYSTEM FOR THE AREAS AND/OR BUILDINGS WITHIN THE SCOPE OF WORK OF THIS PROJECT:

- [X] COMPLIES WITH SB575
  - [X] A FULLY-AUTOMATIC SYSTEM HAS BEEN DESIGNED FOR ALL AREAS, OR
  - [ ] THE AREAS AND/OR BUILDINGS ARE SPRINKLERED ABOVE THE CEILING, SO HEAT DETECTORS ARE EXEMPTED FROM ABOVE-CEILING AREAS. THE SYSTEM IS OTHERWISE FULLY AUTOMATIC.
- [X] AN AUTOMATIC DIALER TO A UL-APPROVED CENTRAL STATION:
  - [X] IS EXISTING, OR
  - [ ] IS INCLUDED AS PART OF THIS PROJECT.
- [ ] IS EXEMPT FROM SB575
  - [ ] THE TOTAL PROJECT CONSTRUCTION VALUE IS LESS THAN $200,000, OR
  - [ ] THE PROJECT CONSISTS OF ONLY MODULAR BUILDINGS WHICH ARE TEMPORARY; THESE BUILDINGS SHALL BE REMOVED NO MORE THAN THREE YEARS FROM THE INSTALLATION DATE UNLESS A THREE-YEAR EXTENSION IS APPROVED BY DSA, OR
  - [ ] THE PROJECT IS NOT FUNDED UNDER CHAPTER 12.5 OF THE LEROY F. GREENE SCHOOL FACILITIES ACT. IT WILL BE 100% FUNDED BY LOCAL FUNDS.

SB575 N.T.S. 14

FIRE ALARM MONITORING NOTE

AUTOMATIC FIRE ALARM SYSTEMS SHALL TRANSMIT THE ALARM, SUPERVISORY AND TROUBLE SIGNALS TO AN APPROVED SUPERVISING STATION AS REQUIRED BY NFPA 72 AS AMENDED BY CFC CHAPTER 80. THE SUPERVISING STATION SHALL BE LISTED AS EITHER UUFX OR UUJS BY UNDERWRITERS LABORATORY OR SHALL MEET THE REQUIREMENTS OF FACTORY MUTUAL RESEARCH APPROVAL STANDARD 3011. SUPERVISION OF SYSTEM AND LEASED TELEPHONE LINES SHALL BE ARRANGED BY OWNER.

FIRE ALARM MONITORING NOTE N.T.S. 15

FIRE ALARM SYSTEM OPERATIONAL MATRIX

DEVICE	ACTIVATE EVACUATION SIGNALS/STROBES	SHUTDOWN FIRE/SMOKE DAMPER, OR ACTIVATE SMOKE VENT RELEASE	SHUTDOWN HVAC EQUIPMENT	ANNUNCIATE AT BUILDING FACP AND ALL REMOTE ANNUNCIATORS	SEND SIGNAL TO CENTRAL STATION
FIRE ALARM PANEL SYSTEM TROUBLE				X	X
SMOKE DETECTOR	X			X	X
HEAT DETECTOR	X			X	X

FIRE ALARM OPERATIONAL MATRIX 16

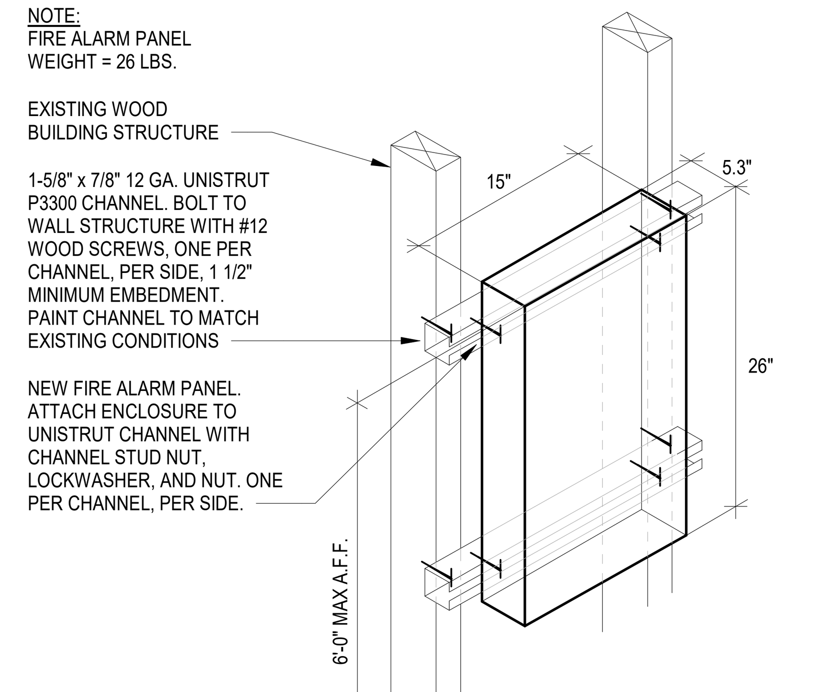

FIRE ALARM PANEL MOUNTING N.T.S. 9

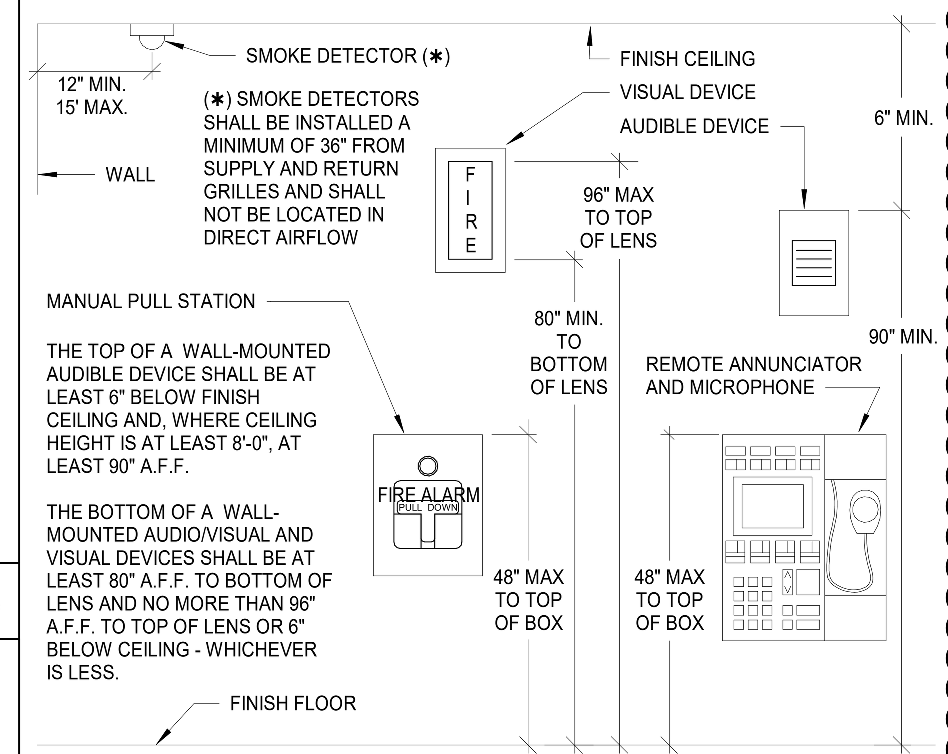

FIRE ALARM DEVICE ELEVATIONS N.T.S. 10

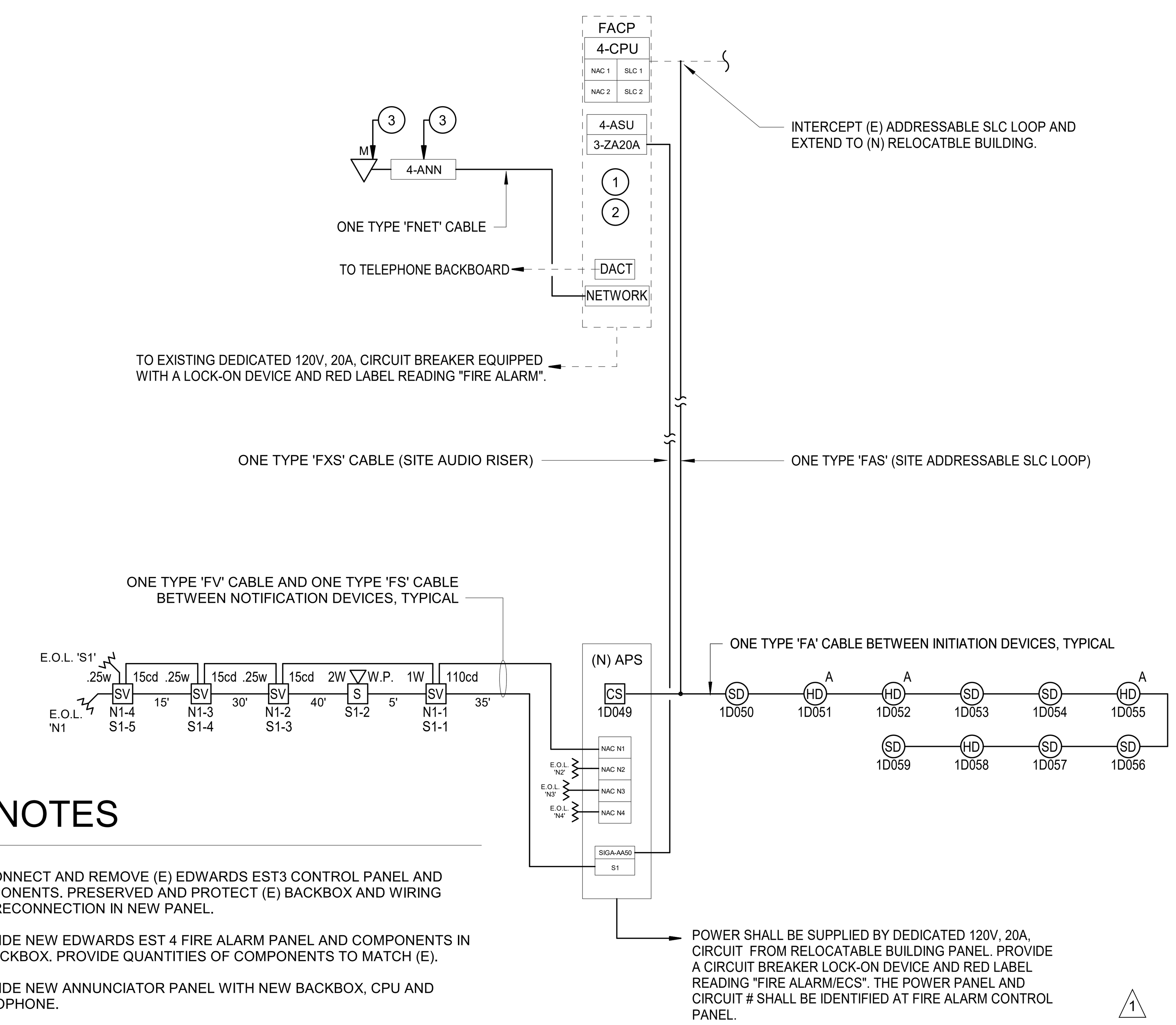

KEYNOTES

1. DISCONNECT AND REMOVE (E) EDWARDS EST3 CONTROL PANEL AND COMPONENTS. PRESERVED AND PROTECT (E) BACKBOX AND WIRING FOR RECONNECTION IN NEW PANEL.
2. PROVIDE NEW EDWARDS EST 4 FIRE ALARM PANEL AND COMPONENTS IN (E) BACKBOX. PROVIDE QUANTITIES OF COMPONENTS TO MATCH (E).
3. PROVIDE NEW ANNUNCIATOR PANEL WITH NEW BACKBOX, CPU AND MICROPHONE.

FIRE ALARM RISER DIAGRAM N.T.S. 2

FIRE ALARM CONTROL PANEL 'FACP' BATTERY CALCULATIONS

QTY.	DEVICE	DESCRIPTION	STANDBY CURRENT	ALARM CURRENT/ DEVICE	ALARM CURRENT
1	EST4	Fire Aalrm Control Panel - Base panel (1)	-----	-----	-----
1	4-PPS/M	Power Supply (2)	-----	-----	-----
1	4-CPU	Central Processor	0.230	0.230	0.230
1	4-NET-AD	Network Adder Module	0.092	0.092	0.092
1	4-LCD	Main Color Touchscreen LCD Display	0.050	0.110	0.110
1	3-SSDC1	Dual SIGA Controller (3)	0.264	0.336	0.336
2	3-IDC8/4	Hardwired Module	0.096	0.408	0.816
1	3-MODCOM	DACT Module	0.060	0.095	0.095
1	4-AUDTELS	Audio Source Unit	0.085	0.101	0.101
1	3-ZA20x	20W Zone Amplifier	0.062	1.120	1.120
1	ANNUNCIATOR	EST4 Series Annunciator with LCD and MIC	0.125	0.125	0.125
1	N/A	Notification Appliance Load	0.000	3.530	3.530
6	SIGA2-OSD	Addressable Smoke Detectors	-----	-----	------- (4)
4	SIGA2-HRS	Addressable Heat Detectors	-----	-----	------- (4)
		TOTALS	1.064		6.555

TOTAL ALARM AMP-HOURS (15 MIN.) =	0.25	HR	x	6.555	A	=	1.6388 A-H
TOTAL STANDBY AMP-HOURS (24 HRS) =	24	HR	x	1.064	A	=	25.5360 A-H
TOTAL REQUIRED AMP-HOURS =						=	**27.1748 A-H**
TOTAL DESIGN AMP-HOURS WITH 25% SAFETY FACTOR =						=	**33.9684 A-H**
BATTERIES							**55.000 A-H**

FIRE ALARM CONTROL PANEL 'FACP-A' NOTES:

1) FIRE ALARM CONTROL PANEL STANDBY AND ALARM CURRENT IS A CUMLATIVE TOTAL OF ALL INTERNAL COMPONENTS LISTED BELOW.
2) THE POWER SUPPLY IS CONNECTED TO A DEDICATED 120V CIRCUIT. THERE IS NO STANDBY OR ALARM CURRENT DRAW ON THE SYSTEM BATTERIES.
3) THE SIGA DEVICE CONTROLLER IS CALCUALTED WITH THE MAXIMUM SIGNATURE ADDRESSABLE DEVICE LOAD (TOTAL CAPACITY FOR ALL ADDRESSABLE DEVICES).
4) STANDBY AND ALARM CURRENT FOR NEW INITIATION DEVICES ARE INCLUDED IN STANDBY AND ALARM CURRENT FOR THE DUAL SIGA CONTROLLER.

FIRE ALARM AUXILIARY POWER SUPPLY 'APS' BATTERY CALCULATION

QTY.	DEVICE	DESCRIPTION	STANDBY CURRENT	ALARM CURRENT/ DEVICE	ALARM CURRENT
1	APS-F	Fire Alarm Auxiliary Power Supply, Edwards #APS10A	0.1050	0.2700	0.2700
1	SIGA-AA50	Fire Alarm Amplifier, Edwards #SIGA-AA50 (2)	0.0020	2.8000	2.8000
		STROBE CURRENT (NAC N1)			
3	SV15	Multi-Candela Speaker Strobe (15cd) Edwards #G4SVRF	-------	0.0280	0.0840
1	SV110	Multi-Candela Speaker Strobe (110cd) #G4SVRF	-------	0.0280	0.0280
		SPEAKER CURRENT (CKT S1)			
3	SP-1/4W	Multi-Candela Speaker Strobe (.25w) Edwards #G4SVRF	-------	-------	------- (3)
1	SP-1W	Multi-Candela Speaker Strobe (1w) Edwards #G4SVRF	-------	-------	------- (3)
1	SP-2W	Exterior Weatherproof Speaker (2W) Edwards #WG4RF-S/WG4RTS	-------	-------	------- (3)
		TOTALS	0.1070	3.1260	3.1820

TOTAL ALARM AMP-HOURS (15 MIN.) =	0.25	HR	x	3.182	A	=	0.7955 A-H
TOTAL STANDBY AMP-HOURS (24 HRS) =	24	HR	x	0.107	A	=	2.5680 A-H
TOTAL REQUIRED AMP-HOURS =						=	**3.3635 A-H**
TOTAL DESIGN AMP-HOURS WITH 25% SAFETY FACTOR =						=	**4.2044 A-H**
BATTERIES							**7.000 A-H**

FIRE ALARM AUXILIARY POWER SUPPLY 'APS-F' NOTES:

2) THE SIGA AA50 AMPLIFIER IS CALCUALTED WITH THE MAXIMUM AUDIO DEVICE LOAD (CAPACITY FOR ALL...
3) SPEAKER ALARM CURRENT IS INCLUDED IN THE MAXIMUM OUTPUT OF THE SIGA-AA50 AMPLIFIER.

NAC 'N1' VOLTAGE DROP CALCULATION

QTY.	DEVICE	DESCRIPTION	STANDBY CURRENT	ALARM CURRENT/ DEVICE	ALARM CURRENT
3	SV15	Multi-Candela Speaker Strobe (15cd) Edwards #G4SVRF		0.0280	0.0840
1	SV110	Multi-Candela Speaker Strobe (110cd) Edwards #G4SVRF		0.0280	0.0280
		TOTAL CURRENT ADDED TO CIRCUIT		0.056	0.112

LENGTH OF WIRE FROM FACP TO LAST DEVICE (IN FEET) =	**125**
ACTUAL SIZE OF WIRE INSTALLED = **12** AWG **6530** CIRCULAR MILS	
CALCULATED VOLTAGE DROP (IN VDC) =	**0.046**
CIRCUIT VOLTAGE CALCULATED AT LAST DEVICE (IN VDC) =	**24 VDC**
PERCENT VOLTAGE DROP (%) =	**0.19 %**

VOLTAGE DROP FORMULA:
VOLTAGE DROP = 2 X 10.8 x LENGTH OF CIRCUIT TO FARTHEST DEVICE x CURRENT / WIRE SIZE IN C.M.
COMPUTED WITH TOTAL CURRENT ON CIRCUIT AT MAXIMUM LENGTH (CLASS A CIRCUIT).

dB LINE LOSS CALCULATION

SPEAKER VOLTAGE = 70

SPEAKERS	DEVICE POWER (WATTS)	SIGNAL CKT S1 QTY.	SIGNAL CKT S1 WATTS	SIGNAL CKT S2 QTY.	SIGNAL CKT S2 WATTS	SPEAKER QTY TOTAL.	MIN. AMP SIZE (WATTS)
SPEAKER - 1/4 WATT TAP	0.25	3	0.75	0	0	3	4.5
SPEAKER - 1/2 WATT TAP	0.5	0	0	0	0	0	
SPEAKER - 1 WATT TAP	1	1	1	0	0	1	
SPEAKER - 2 WATT TAP	2	1	2	0	0	1	
TOTAL POWER ON CKT (P) WATTS		3.75		0			
LOAD RESISTANCE (LR) OHMS		1307		-			
TOTAL WIRE LENGTH (D) FT		125		0			
WIRE SIZE		14 AWG		14 AWG			
TOTAL WIRE RESISTANCE (WR) OHMS		0.815		-			
POWER LOSS (PL) dB		**-0.01**		**-**			

FORMULAS
WIRE RESISTANCE (R) (OHMS/Kft)*
18 AWG = 8.08
16 AWG = 5.08
14 AWG = 3.26
12 AWG = 2.05
*VALUES PER NFPA 70

TOTAL WIRE RESISTANCE (WR) = (R / 1000) * D
LOAD RESISTANCE (LR) = (SPEAKER VOLTAGE)^2 / P
POWER LINE LOSS (PL) = 10 * LOG (1- (WR / (WR+LR)))

BATTERY AND VOLTAGE DROP CALCULATIONS N.T.S. 4

MARK	DATE	DESCRIPTION
1	4.22.25	ADDENDUM 05 - FIRE ALARM REV
B	11/22/24	DSA BACKCHECK

Teter, Inc. expressly reserves its common law copyright and other property rights in these plans. This document, the ideas and designs incorporated herein, as an instrument of professional service, is not to be used in whole or in part, for any other project without prior written authorization.

REGISTERED PROFESSIONAL ENGINEER JASON MARCH No. E 24293 12-31-2? ELECTRICAL STATE OF CALIFORNIA

TETER, INC.
FRESNO HEADQUARTERS
VISALIA | BAKERSFIELD | MODESTO | SAN LUIS OBISPO
ARCHITECTS ENGINEERS CONNECTED
TETER

STOCKTON UNIFIED SCHOOL DISTRICT
HAMILTON ELEM ELOP
2245 E. 11TH ST.
STOCKTON, CA

DRAWING TITLE
FIRE ALARM RISER DIAGRAM & CALCULATIONS

PROJECT NO.
23-13018.00

DRAWING
E710

AD5-HAM-E06

\\tetr-file1\Users\lesly.macias_TETR\Documents\13018-E-STOCKTON HAMILTON ELEM ELOP_lesly.maciasTBNP5.rvt
PLOT DATE: 4/22/2025 9:01:09 PM

\\tetr-file1\Users\lesly.macias_TETR\Documents\13018-E-STOCKTON HAMILTON ELEM ELOP_lesly.maciasTBNP5.rvt

FIRE ALARM CABLE SCHEDULE

CABLE DESIGNATION	DESCRIPTION	MANUFACTURER & CATALOG #	OUTER JACKET COLOR	SYSTEM	USE
'FXS'	1 PR, #14 AWG STRANDED UNSHIELDED AQUASEAL FPL	WEST PENN #AQ226	BLACK	FIRE ALARM	SITE AUDIO RISER CABLE - EXTERIOR/OUTDOOR
'FAS'	1 PR, #16 AWG STRANDED UNSHIELDED AQUASEAL FPL	WEST PENN #AQC225	BLACK	FIRE ALARM	SITE ADDRESSABLE SLC LOOP CABLE - EXTERIOR/OUTDOOR
'FA'	1 PR, #16 AWG SOLID UNSHIELDED FPL	WEST PENN #D990	RED	FIRE ALARM	ADDRESSABLE SLC LOOP CABLE - INTERIOR
'FS'	1 PR, #14 AWG SOLID SHIELDED, FPLP	WEST PENN #60992B	RED	FIRE ALARM	AUDIBLE (SPEAKER) NOTIFICATION APPLIANCE CIRCUIT - INTERIOR
'FV'	1 PR, #12 SOLID UNSHIELDED FPLP	WEST PENN #60995B	RED	FIRE ALARM	VISUAL (STROBE) NOTIFICATION APPLIANCE CIRCUIT - INTERIOR
'FNET'	4-STRAND MULTI-MODE FIBER OPTIC CABLE (62.5/125um)	CORNING INFINICOR 300 OR EQUIVALENT	BLACK	FIRE ALARM	SITE OPTICAL FIBER FIRE ALARM NETWORK

1

FIRE ALARM CABLE SCHEDULE N.T.S. 13

TELECOMMUNICATION CABLE SCHEDULE

CABLE DESIGNATION	DESCRIPTION	MANUFACTURER & CATALOG #	OUTER JACKET COLOR	SYSTEM	USE
'SFO'	6-STRAND SINGLE-MODE FIBER OPTIC CABLE	CORNING SMF-28e+ OR EQUIVALENT	BLACK	DATA	SITE OPTICAL FIBER DATA NETWORK
'D'	4 UTP #24 AWG CATEGORY 6 FILLED OUTDOOR	COMMSCOPE MEDIA 6 #6NF4+	BLACK	DATA	HORIZONTAL DATA CABLE - OUTDOOR
'H'	ACTIVE FIBER OPTIC HDMI CABLE	CHROMIS #AOC-18G-R-OBXP OR EQUIVALENT	BLACK	VIDEO	BUILDING HDM1 CABLE M/M

TELLECOMMUNICATIONS CABLE SCHEDULE N.T.S. 14

LIGHTING FIXTURE SCHEDULE

FIXTURE DESIGNATION	FIXTURE VOLTAGE	FIXTURE WATTAGE	MOUNTING	DRIVER & COLOR TEMP	DESCRIPTION	MANUFACTURER	CATALOG #
	0 V	0					
S1	120 V	69	POLE PER 18/E600	LED - 4000K	SINGLE HEAD POLE MOUNTED SITE LIGHT + 12'-6" x 5" SQUARE STRAIGHT STEEL POLE WITH HANDHOLE	LITHONIA	DSX0 LED-P3-40K-80CRI-T5LG-MVOLT-SPA-PIR-DDBXD + SSS-12-6-5G-DM19AS-CPL12/15B-EHH15D-DDBXD
W1	120 V	32	WALL MOUNTED	LED - 4000K	WALL MOUNTED LED LIGHT FIXTURE, +8'AFF (13.5 LBS)	LITHONIA	WDGE2 LED-P3-40K-80CRI-TFTM-MVOLT-SRM

LIGHT FIXTURE SCHEDULE N.T.S. 14

PLOT DATE: 4/22/2025 9:01:11 PM

CODES, RULES & REGULATIONS

ALL WORK SHOWN HEREIN SHALL COMPLY WITH THE CURRENT REGULATIONS OF THE CALIFORNIA STATE FIRE MARSHAL, CALIFORNIA BUILDING CODE, TITLES 8 AND 19 THROUGH 24, SERVING UTILITY RULES AND ALL OTHER APPLICABLE STATE ORDINANCES. NOTHING IN THESE PLANS OR SPECIFICATIONS SHALL BE INTERPRETED AS TO PERMIT ANY WORK NOT IN CONFORMANCE WITH THESE CODES, RULES AND REGULATIONS. WHERE WORK OF A GREATER DEGREE IS INDICATED IN THESE PLANS OR SPECIFICATIONS, THAT REQUIREMENT SHALL GOVERN SUCH WORK.

C.E.C. TITLE 24 COMPLIANCE

THE LIGHTING AND LIGHTING CONTROL SYSTEMS DESIGN DEPICTED HEREIN IS IN COMPLIANCE WITH REQUIREMENTS OF THE CURRENT CALIFORNIA ENERGY COMMISSION EFFICIENCY STANDARDS FOR NONRESIDENTIAL BUILDINGS.

GENERAL NOTES (TYPICAL)

1. REFER TO THE ARCHITECTURAL REFLECTED CEILING PLAN FOR THE EXACT LOCATION OF ALL CEILING MOUNTED ELECTRICAL EQUIPMENT.
2. REFER TO THE MECHANICAL AND PLUMBING PLANS FOR THE EXACT LOCATION OF ALL MECHANICAL, HVAC AND PLUMBING EQUIPMENT.
3. VERIFY THE EXACT LOCATION OF ALL FLOOR BOXES AND ASSOCIATED TRENCH, BACKFILL AND SAWCUTTING REQUIREMENTS WITH THE ARCHITECT PRIOR TO COMMENCEMENT OF ANY ROUGH -IN WORK FOR THIS EQUIPMENT.
4. COORDINATE ELECTRICAL PANEL AND TERMINAL CABINET LOCATIONS AND ROUTING OF UNDERGROUND CONDUITS WITH THE ARCHITECTURAL AND STRUCTURAL DRAWINGS PRIOR TO COMMENCEMENT OF ANY ROUGH-IN WORK FOR THIS EQUIPMENT.
5. COORDINATE ALL ELECTRICAL WORK WITH OTHER TRADES WHOSE WORK WILL IMPACT PLACEMENT OR CONNECTION OF ELECTRICALLY POWERED EQUIPMENT REGARDLESS OF RESPONSIBILITY FOR SUPPLYING EQUIPMENT.

MEP COMPONENT ANCHORAGE NOTE

ALL MECHANICAL, PLUMBING, AND ELECTRICAL COMPONENTS SHALL BE ANCHORED AND INSTALLED PER THE DETAILS ON THE DSA APPROVED CONSTRUCTION DOCUMENTS. THE FOLLOWING COMPONENTS SHALL BE ANCHORED OR BRACED TO MEET THE FORCE AND DISPLACEMENT REQUIREMENTS PRESCRIBED IN THE 2022 CBC, SECTIONS 1617A.1.18 THROUGH 1617A.1.26 AND ASCE 7-16 CHAPTERS 13, 26 AND 30.

1. ALL PERMANENT EQUIPMENT AND COMPONENTS.
2. TEMPORARY, MOVEABLE OR MOBILE EQUIPMENT THAT IS PERMANENTLY ATTACHED (E.G. HARD WIRED) TO THE BUILDING UTILITY SERVICES SUCH AS ELECTRICITY, GAS OR WATER. "PERMANENTLY ATTACHED" SHALL INCLUDE ALL ELECTRICAL CONNECTIONS EXCEPT PLUGS FOR 110/220 VOLT RECEPTACLES HAVING FLEXIBLE CABLE.
3. TEMPORARY, MOVABLE OR MOBILE EQUIPMENT EQUIPMENT WHICH IS HEAVIER THAN 400 POUNDS OR HAS A CENTER OF MASS LOCATED 4 FEET OR MORE ABOVE THE ADJACENT FLOOR OR ROOF LEVEL THAT DIRECTLY SUPPORT THE COMPONENT IS REQUIRED TO BE RESTRAINED IN A MANNER APPROVED BY DSA.

THE FOLLOWING MECHANICAL AND ELECTRICAL COMPONENTS SHALL BE POSITIVELY ATTACHED TO THE STRUCTURE BUT NEED NOT DEMONSTRATE DESIGN COMPLIANCE WITH THE REFERENCES NOTED ABOVE. THESE COMPONENTS SHALL HAVE FLEXIBLE CONNECTIONS PROVIDED BETWEEN THE COMPONENT AND ASSOCIATED DUCTWORK, PIPING, AND CONDUIT. FLEXIBLE CONNECTIONS MUST ALLOW MOVEMENT IN BOTH TRANSVERSE AND LONGITUDINAL DIRECTIONS:

A. COMPONENTS WEIGHING LESS THAN 400 POUNDS AND HAVE A CENTER OF MASS LOCATED 4 FEET OR LESS ABOVE THE ADJACENT FLOOR OR ROOF LEVEL THAT DIRECTLY SUPPORT THE COMPONENT.

B. COMPONENTS WEIGHING LESS THAN 20 POUNDS, OR IN THE CASE OF DISTRIBUTED SYSTEMS, LESS THAN 5 POUNDS PER FOOT, WHICH ARE SUSPENDED FROM A ROOF OR FLOOR OR HUNG FROM A WALL.

THE ANCHORAGE OF ALL MECHANICAL, ELECTRICAL AND PLUMBING COMPONENTS SHALL BE SUBJECT TO THE APPROVAL OF THE DESIGN PROFESSIONAL IN GENERAL RESPONSIBLE CHARGE OR STRUCTURAL ENGINEER DELEGATED RESPONSIBILITY AND ACCEPTANCE BY DSA. THE PROJECT INSPECTOR WILL VERIFY THAT ALL COMPONENTS AND EQUIPMENT HAVE BEEN ANCHORED IN ACCORDANCE WITH THE ABOVE REQUIREMENTS.

PIPING, DUCTWORK, AND ELECTRICAL DISTRIBUTION SYSTEM BRACING NOTE:

PIPING, DUCTWORK, AND ELECTRICAL DISTRIBUTION SYSTEMS SHALL BE BRACED TO COMPLY WITH THE FORCES AND DISPLACEMENTS PRESCRIBED IN ASCE 7-16 SECTION 13.3 AS DEFINED IN ASCE 7-16 SECTION 13.6.5, 13.6.6, 13.6.7, 13.6.8; AND 2019 CBC, SECTIONS 1617A.1.24, 1617A.1.25, AND 1617A.1.26.

THE METHOD OF SHOWING BRACING AND ATTACHMENTS TO THE STRUCTURE FOR THE IDENTIFIED DISTRIBUTION SYSTEM ARE AS NOTED BELOW. WHEN BRACING AND ATTACHMENTS ARE BASED ON A PREAPPROVED INSTALLATION GUIDE (E.G., OSHPD OPM FOR 2013 CBC OR LATER), COPIES OF THE BRACING SYSTEM INSTALLATION GUIDE OR MANUAL SHALL BE AVAILABLE ON THE JOBSITE PRIOR TO THE START OF AND DURING THE HANGING AND BRACING OF THE DISTRIBUTION SYSTEMS. THE STRUCTURAL ENGINEER OF RECORD SHALL VERIFY THE ADEQUACY OF THE STRUCTURE TO SUPPORT THE HANGER AND BRACE LOADS.

ELECTRICAL DISTRIBUTION SYSTEMS:

SHALL COMPLY WITH THE APPLICABLE OSHPD PRE-APPROVAL (OPM#) #OPM-0052-13, "SEISMIC BRACING AND SUPPORT SYSTEMS"

GENERAL NOTES N.T.S. 12

ELECTRICAL SYMBOL LEGEND

DIMENSIONS INDICATED ARE MEASURED TO CENTERLINE OF ENCLOSURE, UNLESS OTHERWISE NOTED
NOTE: SOME SYMBOLS SHOWN MAY NOT APPLY TO THIS PROJECT

SYMBOL	DESCRIPTION	SYMBOL	DESCRIPTION
E.P.	DENOTES EXPLOSION PROOF CONSTRUCTION	$ a	SINGLE POLE AC SNAP SWITCH @ +48" TO TOP OF BOX, U.O.N. — LOWER CASE SUBSCRIPT INDICATES CONTROLLED SWITCHLEG OF CIRCUIT
D.T.	DENOTES DUST TIGHT CONSTRUCTION	$ 2	TWO POLE AC SNAP SWITCH @ +48" TO TOP OF BOX, U.O.N.
O.C.	DENOTES SPACING DIMENSION ON CENTER LINE OF DEVICE	$ 3	THREE WAY AC SNAP SWITCH @ +48" TO TOP OF BOX, U.O.N.
R.T.	DENOTES RAIN TIGHT CONSTRUCTION	$ 4	FOUR WAY AC SNAP SWITCH @ +48" TO TOP OF BOX, U.O.N.
U.G.	DENOTES UNDERGROUND INSTALLATION	$ M	HORSEPOWER RATED AC SNAP SWITCH @ +48" TO TOP OF BOX U.O.N.
V.P.	DENOTES VAPOR TIGHT CONSTRUCTION	$ P	SINGLE POLE AC SNAP SWITCH WITH PILOT LAMP @ +48" TO TOP OF BOX U.O.N.
W.P.	DENOTES WEATHERPROOF CONSTRUCTION	$ T	DIGITAL TIMER SWITCH, FLUSH MOUNTED @ +48" TO TOP OF BOX U.O.N.
W.T.	DENOTES WATER TIGHT CONSTRUCTION	$ A	SINGLE POLE AC SNAP SWITCH @ +48" TO TOP OF BOX, U.O.N.
A.F.F.	DENOTES ABOVE FINISHED FLOOR	$ K	KEY OPERATED AC SNAP SWITCH @ +48" TO TOP OF BOX U.O.N.
A.F.G.	DENOTES ABOVE FINISHED GRADE	[$]	WALL SWITCH WITH INTEGRAL OCCUPANCY SENSOR @ +48" TO TOP OF BOX, U.O.N.
F.B.O.	DENOTES FURNISHED BY OTHERS	M	OCCUPANCY SENSOR - CEILING MOUNTED
U.O.N.	DENOTES UNLESS OTHERWISE NOTED	M W	OCCUPANCY SENSOR - WALL MOUNTED @ +90" TO TOP OF BOX, U.O.N.
(E)	DENOTES EXISTING TO REMAIN, NO WORK U.O.N.	P	LIGHTING CONTROL SYSTEM DIMMING/POWER PACK MOUNTED IN ATTIC
(N)	DENOTES NEW	RP	LIGHTING CONTROL SYSTEM PLUG LOAD RELAY PACK MOUNTED IN ATTIC
(1)	ELECTRICAL KEYNOTES: DENOTES KEYNOTE #1 OF NOTES ON SAME SHEET	C1	LIGHTING CONTROL SYSTEM 2-BUTTON DIMMING WALL SWITCH @ +48" TO TOP OF BOX, U.O.N.
A-3	CIRCUIT HOME RUN: DENOTES PANEL A, CKT. #3, - 3/4"C. MINIMUM, U.O.N.	C4	LIGHTING CONTROL SYSTEM 4-BUTTON DIMMING WALL SWITCH @ +48" TO TOP OF BOX, U.O.N.
(1)	CIRCUIT FEEDER: DENOTES FEEDER 'F1' PER SYSTEM FEEDER SCHEDULE	C1 L	LIGHTING CONTROL SYSTEM DIMMING WALL SWITCH WITH LOCKING COVER @ +48" TO TOP OF BOX, U.O.N.
	CONDUIT IN ATTIC/WALL: DENOTES 3/4"C-2#12 AWG CU THWN, 1#12 CU GND, U.O.N.	DS	LIGHTING CONTROL SYSTEM DAYLIGHT SENSOR - CEILING MOUNTED
	CONDUIT IN FLOOR/U.G.: DENOTES 3/4"C-2#12 AWG CU THWN, 1#12 CU GND, U.O.N.	nB	LIGHTING CONTROL SYSTEM NETWORK BRIDGE
	DENOTES EXISTING CONDUIT RUN TO REMAIN	nG	LIGHTING CONTROL SYSTEM NETWORK GATEWAY
	CONDUIT RUN - STUBBED, CAPPED AND LABELED.	AD	LIGHTING CONTROL SYSTEM AUTOMATED DEMAND RESPONSE MODULE
	CONDUIT RUN: DENOTES 3/4"C - 3 #12 AWG CU THWN + 1 #12 CU GND, U.O.N.	TC	LIGHTING CONTROL SYSTEM TIME CLOCK
	CONDUIT RUN: DENOTES 3/4"C - 4 #12 AWG CU THWN + 1 #12 CU GND, U.O.N.	PC	PHOTOCELL CONTROL MOUNTED ON ROOF
	CONDUIT RUN: DENOTES 3/4"C - 5 #12 AWG CU THWN + 1 #12 CU GND, U.O.N.	T	LOW VOLTAGE CONTROL TRANSFORMER
	CONDUIT RUN: DENOTES 1"C - 6 #12 AWG CU THWN + 1 #12 CU GND, U.O.N.		
	SEPARATE POWER AND DATA FLOOR BOXES (2)		ELECTRICAL PANELBOARD PER PLANS, FLUSH MOUNTED IN WALL (4)
	FLUSH FLOOR BOX WITH DEVICE(S) INSTALLED PER PLANS, U.O.N. (2)		ELECTRICAL PANELBOARD PER PLANS, SURFACE MOUNTED ON WALL
	TAMPER-RESISTANT SINGLE RECEPTACLE IN WALL @ +18", U.O.N.		TERMINAL CABINET PER PLANS, FLUSH MOUNTED IN WALL (5)
	TAMPER-RESISTANT DUPLEX RECEPTACLE IN WALL @ +18", U.O.N.		TERMINAL CABINET PER PLANS, SURFACE MOUNTED ON WALL
	TAMPER-RESISTANT DUPLEX GFI RECEPTACLE, IN WALL @ 18", U.O.N.		LIGHTING CONTROL PANEL PER PLANS, FLUSH MOUNTED IN WALL (5)
	TAMPER-RESISTANT SWITCHED GFCI RECEPTACLE IN WALL @ +18" A.F.F. U.O.N. (OCC. SENSOR OR WALL SWITCH CONTOLLED)		LIGHTING CONTROL PANEL PER PLANS, SURFACE MOUNTED ON WALL
WP	TAMPER-RESISTANT WEATHER RESISTANT (W/R) DUPLEX GFCI RECEPTACLE W/ W.P. COVER @+18", U.O.N.		FIRE ALARM PANEL PER PLANS, FLUSH MOUNTED IN WALL (5)
	TAMPER-RESISTANT DUPLEX ISOLATED GROUND RECEPTACLE IN WALL @ +18", U.O.N. (7)		FIRE ALARM PANEL PER PLANS, SURFACE MOUNTED ON WALL
	TAMPER-RESISTANT QUADRUPLEX RECEPTACLE IN WALL @ +18", U.O.N.		
	SPECIAL PURPOSE ELECTRICAL OUTLET PER PLAN IN WALL @ 18" U.O.N.	S WP	EXTERIOR SPEAKER (WALL MOUNTED), ELEVATION AS NOTED
	DUPLEX RECEPTACLE FLUSH IN CEILING	S	SPEAKER IN CEILING, U.O.N.
	TAMPER-RESISTANT QUADRUPLEX RECEPTACLE IN WALL @ +18" A.F.F., U.O.N. ONE UNSWITCHED RECEPTACLE AND ONE SWITCHED (OCC. SENSOR CONTROLLED) RECEPTACLE	S	SPEAKER/CLOCK IN COMMON BACKBOX PER PLAN @ 12" BELOW CEILING, U.O.N.
J	JUNCTION BOX		WALL CLOCK PER PLAN @ 12" BELOW CEILING, U.O.N.
J	JUNCTION BOX WITH FLEXIBLE CONDUIT CONNECTION TO EQUIPMENT	S	SPEAKER ON WALL @ 12" BELOW CEILING, U.O.N. (3)
	NON-FUSIBLE DISCONNECT SWITCH	MD	INTRUSION ALARM SYSTEM MOTION DETECTOR (WALL MOUNTED) (3)
	FUSIBLE DISCONNECT SWITCH	DC	INTRUSION ALARM SYSTEM MAGNETIC DOOR CONTACT (3)
	FUSIBLE DISCONNECT SWITCH WITH INTEGRAL MAGNETIC STARTER	WC	INTRUSION ALARM SYSTEM MAGNETIC WINDOW CONTACT (3)
	ELECTRIC MOTOR	GB	INTRUSION ALARM SYSTEM GLASS BREAK DETECTOR (3)
	EXHAUST FAN OR FRACTIONAL HORSEPOWER MOTOR	KP	INTRUSION ALARM SYSTEM KEYPAD (WALL MOUNTED) (3)
	SURFACE MOUNTED RACEWAY, MOUNT @ +18" A.F.F. U.O.N.	CR	INTRUSION ALARM SYSTEM CARD READER (WALL MOUNTED) (3)
	RECESSED LED LIGHTING FIXTURE	FR	INTRUSION ALARM SYSTEM FOB READER (WALL MOUNTED) (3)
	RECESSED LED LIGHTING FIXTURE WITH EMERGENCY BATTERY BACKUP	SC	SECURITY CAMERA (WALL MOUNTED) ROUGH-IN LOCATION PER PLAN (3)
	SURFACE MOUNTED LED LIGHTING FIXTURE		
	SURFACE MOUNTED LED LIGHTING FIXTURE WITH EMERGENCY BATTERY BACKUP	SD	FIRE ALARM SMOKE DETECTOR ON CEILING, U.O.N.
	SURFACE MOUNTED LED STRIP LIGHT	HD	FIRE ALARM HEAT DETECTOR ON CEILING, U.O.N.
	SURFACE MOUNTED LED STRIP LIGHT WITH EMERGENCY BATTERY BACKUP	HD A	FIRE ALARM HEAT DETECTOR IN ATTIC U.O.N.
	POST TOP MOUNTED LIGHTING FIXTURE	DD	FIRE ALARM DUCT DETECTOR IN HVAC DUCT
	WALL MOUNTED LIGHTING FIXTURE	DR	FIRE ALARM DOOR RELEASE
	WALL MOUNTED LIGHTING FIXTURE WITH EMERGENCY BATTERY BACKUP	CR	FIRE ALARM ADDRESSABLE CONTROL RELAY MODULE
	CEILING MOUNTED LIGHTING FIXTURE	CS	FIRE ALARM ADDRESSABLE INPUT/OUTPUT MODULE
	CEILING MOUNTED LIGHTING FIXTURE WITH EMERGENCY BATTERY BACKUP	AM	FIRE ALARM INDIVIDUAL ADDRESSABLE MODULE
	RECESSED LIGHTING FIXTURE	SM	FIRE ALARM SYNC MODULE
	RECESSED FIXTURE WITH EMERGENCY BATTERY BACKUP	F	FIRE ALARM MANUAL PULL STATION @ +48" TO TOP OF BOX, U.O.N.
	SURFACE MOUNTED ROUND LIGHTING FIXTURE	WF	FIRE ALARM WATERFLOW DETECTION SWITCH
	SURFACE MOUNTED ROUND LIGHTING FIXTURE WITH EMERGENCY BATTERY BACKUP	WT	FIRE ALARM ADDRESSABLE WATERFLOW / TAMPER SWITCH MODULE
	ILLUMINATED EXIT SIGN MOUNTED ON CEILING	TS	FIRE ALARM TAMPER SWITCH
	ILLUMINATED EXIT SIGN MOUNTED ON WALL	V	FIRE ALARM VISUAL ALARM UNIT (WALL@ +80" MINIMUM, U.O.N.)
	LOW LEVEL PHOTOLUMINESCENT EXIT SIGN MOUNTED ON WALL	V	FIRE ALARM VISUAL ALARM UNIT (CEILING)
	POLE MOUNTED EXTERIOR LIGHTING FIXTURE	AV	FIRE ALARM HORN/STROBE ALARM UNIT (WALL @ +80" MINIMUM, U.O.N.)
		AV	FIRE ALARM VISUAL ALARM UNIT (CEILING)
2/2 ▷	COMBINATION VOICE AND DATA OUTLET IN WALL, WITH TWO 'D' CABLES TO IDF + TWO 'T' CABLES TO TELEPHONE BACKBOARD. (1) (6)	H	INTERIOR FIRE ALARM HORN (WALL @ +10'-0", U.O.N.)
X ▷	DATA OUTLET IN WALL @ +18", U.O.N., WITH 'D' CABLES TO IDF OR MDF (SUBSCRIPT INDICATES QUANTITY OF CABLES AND STATION SIDE JACKS) (1) (6)	▷H	EXTERIOR FIRE ALARM HORN (EXTERIOR WALL)
TV ▷	TELEVISION OUTLET IN WALL @ +18", U.O.N. (1)	SV	VOICE EVACUATION SPEAKER/STROBE ALARM UNIT (WALL @ +80" MINIMUM, U.O.N.)
M ▷	MICROPHONE OUTLET IN WALL @ +18", U.O.N. (1)	SV	VOICE EVACUATION SPEAKER/STROBE ALARM UNIT (CEILING)
S ▷	SPEAKER OUTLET IN WALL @ +18", U.O.N. (1)	▷S	EXTERIOR VOICE EVACUATION SPEAKER (EXTERIOR WALL)
IC ▷	INTERCOMMUNICATIONS HANDSET ON WALL @ +48" TO TOP OF BOX U.O.N.		FIRE ALARM CIRCUIT END OF LINE RESISTOR
WAP	WIRELESS ACCESS POINT LOCATION, PROVIDE TWO TYPE 'D' CABLES TO IDF OR MDF		

ELECTRICAL SYMBOLS NOTES:

(1) RUN 1"C CONCEALED IN WALL AND STUB INTO ACCESSIBLE ATTIC SPACE ABOVE NEAREST T-BAR CEILING, U.O.N.

(2) RUN 1"C TO NEAREST WALL, THEN RISE CONCEALED IN WALL AND STUB INTO ACCESSIBLE ATTIC SPACE ABOVE NEAREST T-BAR CEILING, U.O.N. FOR SINGLE SYSTEMS INDIVIDUAL FLOORBOXES. WHERE MULTIPLE SYSTEMS OCCUR WITHIN A COMMON FLOOR BOX, RUN TWO 1"C PER ABOVE.

(3) SYSTEM IS ROUGH IN ONLY, PROVIDE BACKBOX, BLANK COVERPLATE AND CONDUIT STUB PER DETAIL PLANS.

(4) IN ADDITION TO CONDUITS SHOWN ON PLANS, STUB ONE 1 1/4"C, ONE 1"C, AND TWO 3/4"C (SPARE) INTO ACCESSIBLE ATTIC SPACE ABOVE NEAREST T-BAR CEILING, U.O.N. THIS REQUIREMENT APPLIES TO EACH POWER AND LIGHTING PANEL INDICATED FLUSH MOUNTED ON POWER PLAN.

(5) IN ADDITION TO CONDUITS SHOWN ON PLANS, STUB ONE 1"C AND TWO 3/4"C (SPARE) INTO ACCESSIBLE ATTIC SPACE ABOVE NEAREST T-BAR CEILING U.O.N.. REQUIREMENT APPLIES TO EACH SIGNAL SYSTEM T.C. INDICATED FLUSH MOUNTED ON SIGNAL PLAN.

(6) 4S BACKBOX WITH SINGLE GANG TRIM AND COVERPLATE.

(7) ORANGE DEVICE (ISOLATED GROUND DUPLEX RECEPT. ONLY) WITH ENGRAVED WORDING ON COVER PLATE ABOVE ISOLATED GROUND RECEPT.: "COMPUTER ONLY".

SYMBOL LEGEND AND NOTES N.T.S. 4

Teter, Inc. expressly reserves its common law copyright and other property rights in these plans. This document, the ideas and designs incorporated herein, as an instrument of professional service, is not to be used in whole or in part, for any other project without prior written authorization.

MARK	DATE	DESCRIPTION
1	4.22.25	ADDENDUM 05 - FIRE ALARM REV
B	11/22/24	DSA BACKCHECK

REGISTERED PROFESSIONAL ENGINEER JASON MARCH No. E 24293 12-31-2? ELECTRICAL STATE OF CALIFORNIA

TETER, INC.
FRESNO HEADQUARTERS
VISALIA | BAKERSFIELD | MODESTO | SAN LUIS OBISPO
ARCHITECTS ENGINEERS CONNECTED

TETER

STOCKTON UNIFIED SCHOOL DISTRICT
HAMILTON ELEM ELOP
2245 E. 11TH ST.
STOCKTON, CA

DRAWING TITLE
ELECTRICAL LEGEND, NOTES, & SCHEDULES

PROJECT NO.
23-13018.00

DRAWING
E800

AD5-HAM-E07